BÖHMER GmbH

BALL VALVES

Fully Welded Ball Valves

API6D & API6D SS

COMPANY PROFILE:

Established:	1956, Family Owned and Operated
Managing Director:	Thomas Böhmer PhD Eng. (Dr. Ing.-Germany)
Employees:	270
Annual Sales:	$100 Million US
Facilities:	Main Plant in Sprockhoevel, Germany 300,000 sq. ft. Subsidiary Plant in Hattingen, Germany 250,000 sq. ft.

SERVICE APPLICATIONS:

- Oil & Gas Pipelines
  Above ground or Buried Service
- Power Plants
- LNG
- Gas Storage
- Compressor Stations
- Gas Metering and Control Stations
- Offshore Platforms and FPSO Facilities
- Ship Building: Gas and Oil Tanker
- District heating
- Solid Media
- Special Applications

CERTIFICATIONS:

- API6D Certificate number 6D-0292
- API6D SS Certificate number 6DSS-0014
- DIN EN ISO 9001
- PED (Pressure Equipment Directive)
- FIRE SAFE ACC. BS6755/API6FA/API607
- COMPONENT APPROVAL
- GOST
- Others

VALVE INFORMATION

DESIGN:

- Fully welded body
- Soft, metal to metal or PMSS (Primary metal secondary soft seat)
- Nominal size range: 0.5” (12 mm) to 56” (1400 mm)
- Nominal pressure range: ANSI 150 to 2500
- Standard temperature range: -20ºF (-29ºC) to + 212ºF (100ºC)

DESIGN FEATURES:

- API6D & API6D SS
- Maintenance free valve
- Fully welded body
- Trunnion mounted
- Spring energized seats
- Metal or soft seated
- Full or reduced bore
- Flanged or welded ends
- Anti blow-out stem
- Depending on design: Removable stem seals under full line pressure in open or closed position
- Anti-static device
- Self lubricated bearings
- Valve plate foot stand as standard on larger valves

OPTIONS:

- Emergency sealant injection
- Double block and bleed
- Extended lines for drain, vent and emergency sealant injection
- Special coatings
- Underground installation
- Fire Safe
- Bypass directly at the valve
- Locking device
- Other design features on request

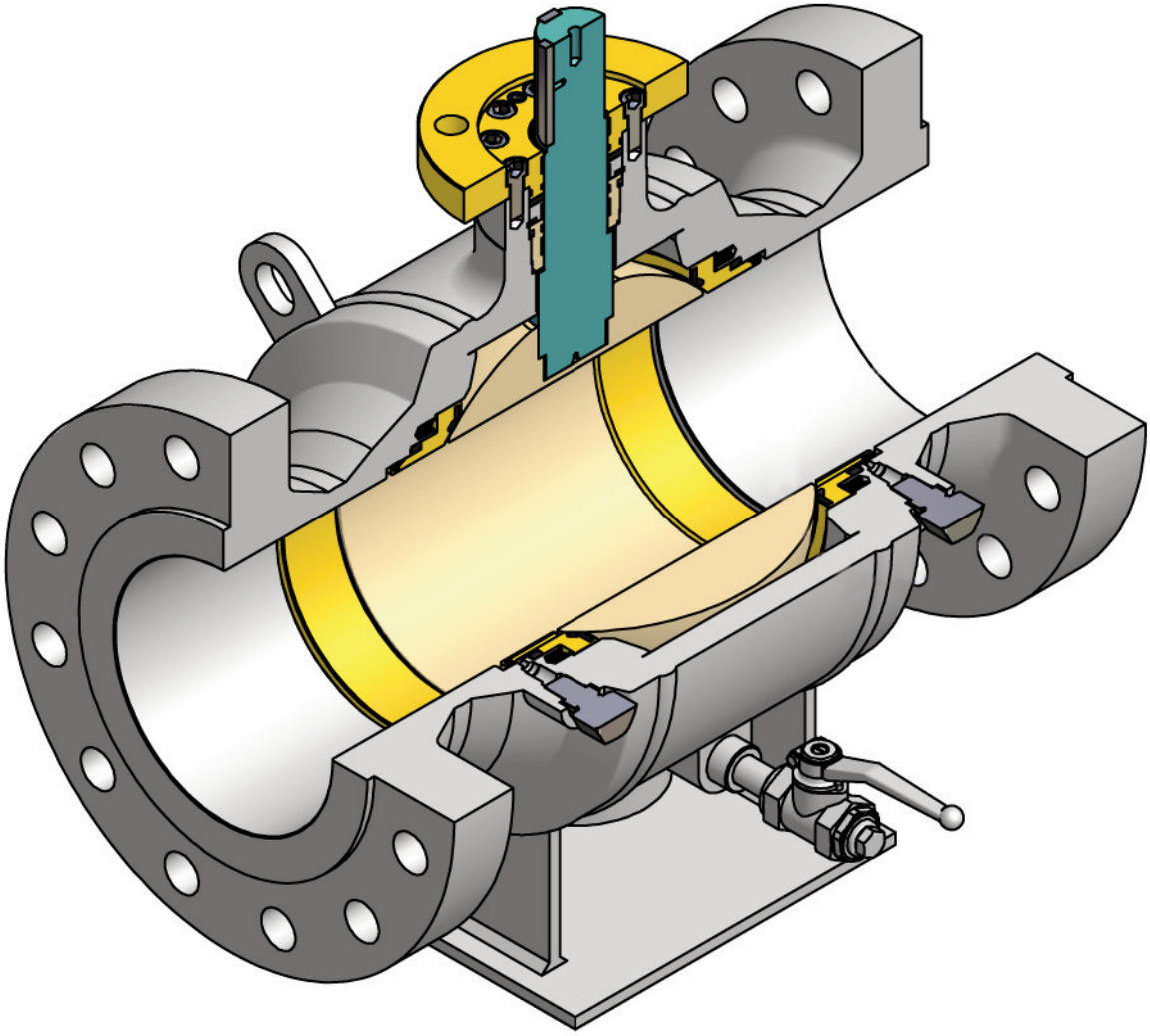

FULLY WELDED BALL VALVE

DESIGN

Boehmer fully welded ball valves meet the requirements of the most common national and international standards.

FIRE PROTECTION

When fire safe certification is required, Boehmer can produce a range of valves to API 6FA, API 607 and BS 6755 P 2

TRUNNION MOUNTED BALL

The standard design of Boehmer ball valves provides a trunnion mounted ball for pressure class ANSI150 starting at 6 inch and ANSI300 and above at 3 inch size. The maintenance-free bearings for stem and trunnion are self-lubricating, thus assuring a lower torque especially for high pressure ratings.

ANTI-STATIC DEVICE

When required, the ball valve design includes an electric conductive connection between the internal parts of the ball valve and the body, providing the anti-static function.

STEM SEALING

The sealing of the stem to the atmosphere is achieved by up to three independent sealing systems. The stem sealing design ensures the anti-blow-out function, too. Some valves can be produced with a design of the stem assembly so the seals are replaceable under full pressure in either open or closed position.

EMERGENCY SEALING

As an option, Boehmer ball valves can be delivered with an additional emergency sealing injection for the seat-rings and/or stem sealing.

SEAT SEAL SYSTEM

The Boehmer ball valves provide spring supported seats as a standard. The seats are pressed against the ball surface by spring elements and ensure a tight shut-off at low line pressure. In addition the sealing effect is assisted by the pressure in line. So the total sealing force is the sum of the spring force and the force resulting from the pressure which increases proportionally with the line pressure. Depending on applications and on customers´ request the sealing systems can be delivered:

- **soft seated**
- **primary metal- / secondary soft seated**
- **metal to metal seated**

DOUBLE BLOCK AND BLEED

The cavity can be relieved via vent or drain connections at the body. Depending on design the independent upstream and downstream sealings ensure a tight shut-off at the body cavity in fully opened and closed position.

This allows for verifying the tightness of the ball valve in line via the cavity.

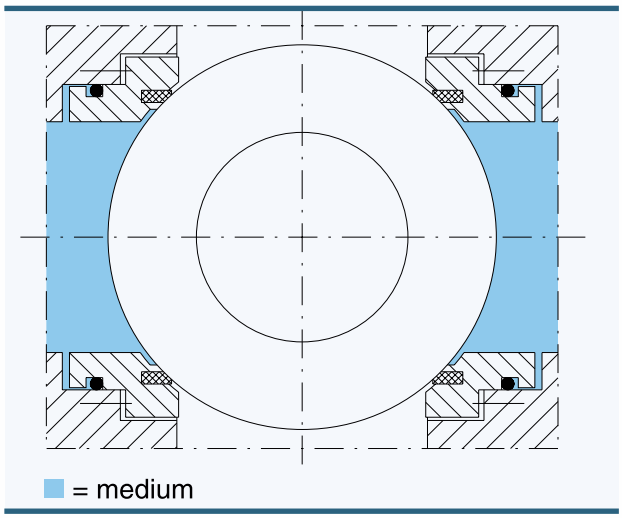

SELF-RELIEVING SEAT DESIGN

This seat system is designed to automatically vent any excessive build-up pressure in the body cavity. The floating seat design allows for relieving the overpressure in the pipeline.

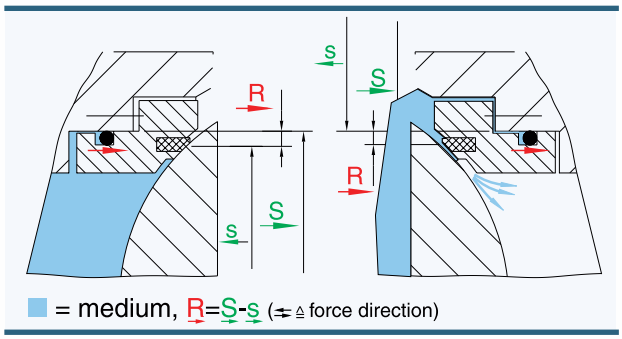

BI-DIRECTIONAL SEATING SYSTEM

At this design, each seat ring will provide a total sealing in both directions. This system does not enable the self-relieving of the excessive pressure in the cavity.

This allows for verifying the tightness of the ball valve in line by bleeding or pressurizing the cavity.

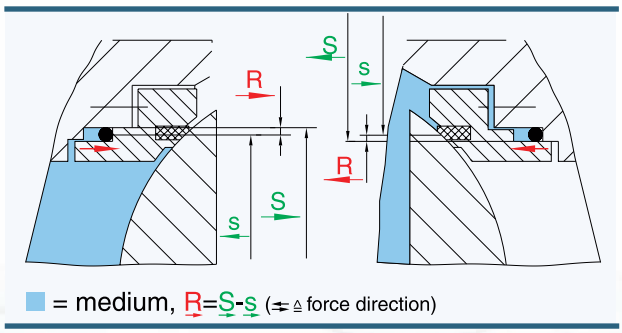

BÖHMER GmbH
BALL VALVES

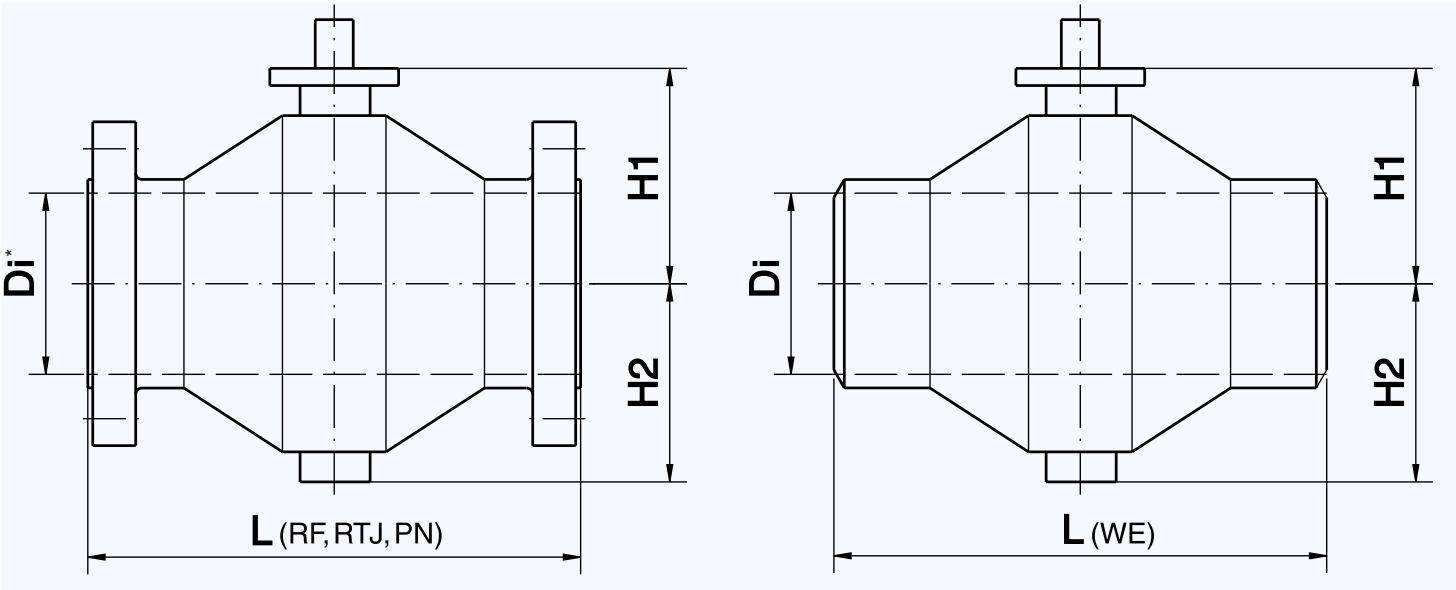

ANSI150

Nominal Size		Face to Face dimensions								Weight			
mm	inches	L(RF)		L(WE)		H1		H2		Flange		Welded	
		mm	inches	mm		mm	inches	mm	inches	kg	lb	kg	lb
25	1	127	5.00	216	8.50	35	1.38	27	1.06	4.5	10.00	2	4.00
50	2	178	7.01	241	9.49	63	2.48	45	1.77	12	26.00	6	13.00
80	3	203	7.99	283	11.14	100	3.94	70	2.76	28	62.00	20	44.00
100	4	229	9.02	305	12.01	113	4.45	86	3.39	45	99.00	32	71.00
150	6	394	15.51	400	15.75	166	6.54	157	6.18	85	187.00	59	130.00
200	8	457	17.99	460	18.11	201	7.91	192	7.56	130	287.00	90	198.00
250	10	533	20.98	600	23.62	283	11.14	249	9.80	295	650.00	265	584.00
300	12	600	23.62	700	27.56	325	12.80	313	12.32	505	1113.00	450	992.00
350	14	686	27.01	800	31.50	353	13.90	340	13.39	680	1499.00	610	1345.00
400	16	762	30.00	900	35.43	435	17.13	406	15.98	960	2116.00	850	1874.00
450	18	864	34.02	1000	39.37	470	18.50	450	17.72	1190	2624.00	1050	2315.00
500	20	914	35.98	1090	42.91	512	20.16	488	19.21	1565	3450.00	1390	3064.00
550	22	1016	40.00	1130	44.49	649	25.55	551	21.69	1880	4145.00	1710	3770.00
600	24	1067	42.01	1150	45.28	688	27.09	594	23.39	2120	4674.00	1890	4167.00
700	28	1245	49.02	1295	50.98	742	29.21	661	26.02	2940	6482.00	2650	5842.00
750	30	1295	50.98	1346	52.99	785	30.91	711	27.99	3480	7672.00	3190	7033.00
800	32	1372	54.02	1397	55.00	852	33.54	774	30.47	4030	8885.00	3630	8003.00
900	36	1524	60.00	1499	59.02	912	35.91	830	32.68	6650	14661.00	6050	13338.00
1000	40	1948	76.69	2010	79.13	1110	43.70	978	38.50	8900	19621.00	8250	18188.00
1050	42	2015	79.33	2085	82.09	1163	45.79	1026	40.39	9900	21826.00	9150	20172.00
1200	48	2145	84.45	2210	87.01	1322	52.05	1192	46.93	16000	35274.00	14900	32849.00
1400	56	2360	92.91	2445	96.26	1530	60.24	1348	53.07	20500	45195.00	19300	42549.00

** Dimension Di supplied with drawing issued after receipt of order*

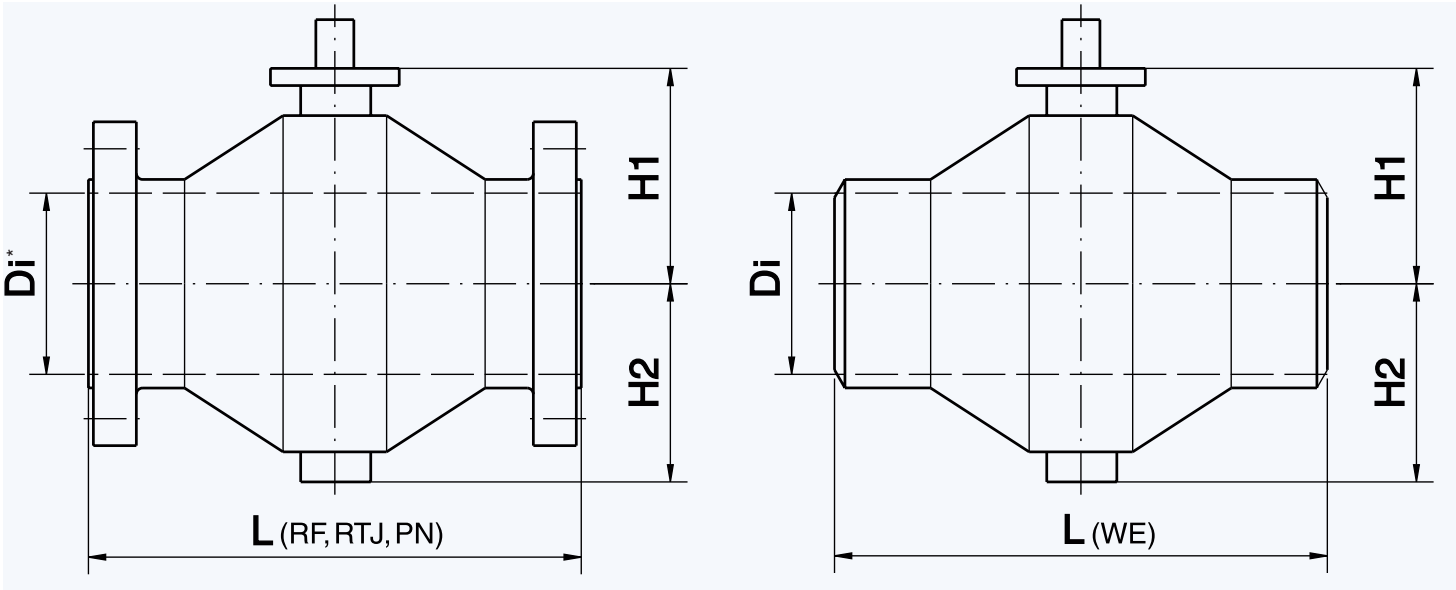

ANSI300

Nominal Size		Face to Face dimensions								Weight			
mm	inches	L(RF)		L(WE)		H1		H2		Flange		Welded	
		mm	inches	mm		mm	inches	mm	inches	kg	lb	kg	lb
25	1	140	5.51	216	8.50	35	1.38	27	1.06	4.5	10.00	2	4.00
50	2	216	8.50	241	9.49	63	2.48	45	1.77	12	26.00	6	13.00
80	3	283	11.14	283	11.14	100	3.94	95	3.74	28	62.00	20	44.00
100	4	305	12.01	305	12.01	113	4.45	108	4.25	45	99.00	32	71.00
150	6	403	15.87	400	15.75	198	7.80	165	6.50	89	196.00	59	130.00
200	8	502	19.76	460	18.11	233	9.17	201	7.91	135	298.00	90	198.00
250	10	568	22.36	600	23.62	283	11.14	249	9.80	310	683.00	265	584.00
300	12	648	25.51	700	27.56	325	12.80	313	12.32	520	1146.00	450	992.00
350	14	762	30.00	800	31.50	353	13.90	340	13.39	710	1565.00	610	1345.00
400	16	838	32.99	900	35.43	435	17.13	406	15.98	890	1962.00	750	1653.00
450	18	914	35.98	1000	39.37	470	18.50	450	17.72	1210	2668.00	1050	2315.00
500	20	991	39.02	1090	42.91	512	20.16	488	19.21	1710	3770.00	1450	3197.00
550	22	1092	42.99	1130	44.49	649	25.55	551	21.69	2100	4630.00	1850	4079.00
600	24	1143	45.00	1150	45.28	688	27.09	594	23.39	2580	5688.00	2300	5071.00
700	28	1346	52.99	1295	50.98	742	29.21	661	26.02	3190	7033.00	2840	6261.00
750	30	1397	55.00	1346	52.99	785	30.91	711	27.99	3800	8378.00	3350	7385.00
800	32	1524	60.00	1397	55.00	852	33.54	774	30.47	4950	10913.00	4500	9921.00
900	36	1727	67.99	1499	59.02	912	35.91	830	32.68	6900	15212.00	6200	13669.00
1000	40	2048	80.63	2010	79.13	1110	43.70	978	38.50	9200	20283.00	8400	18519.00
1050	42	2112	83.15	2085	82.09	1163	45.79	1026	40.39	10700	23589.00	9800	21605.00
1200	48	2257	88.86	2210	87.01	1322	52.05	1192	46.93	16600	36597.00	15500	34172.00
1400	56	2470	97.24	2445	96.26	1530	60.24	1348	53.07	21300	46958.00	19700	43431.00

** Dimension Di supplied with drawing issued after receipt of order*

BÖHMER GmbH
BALL VALVES

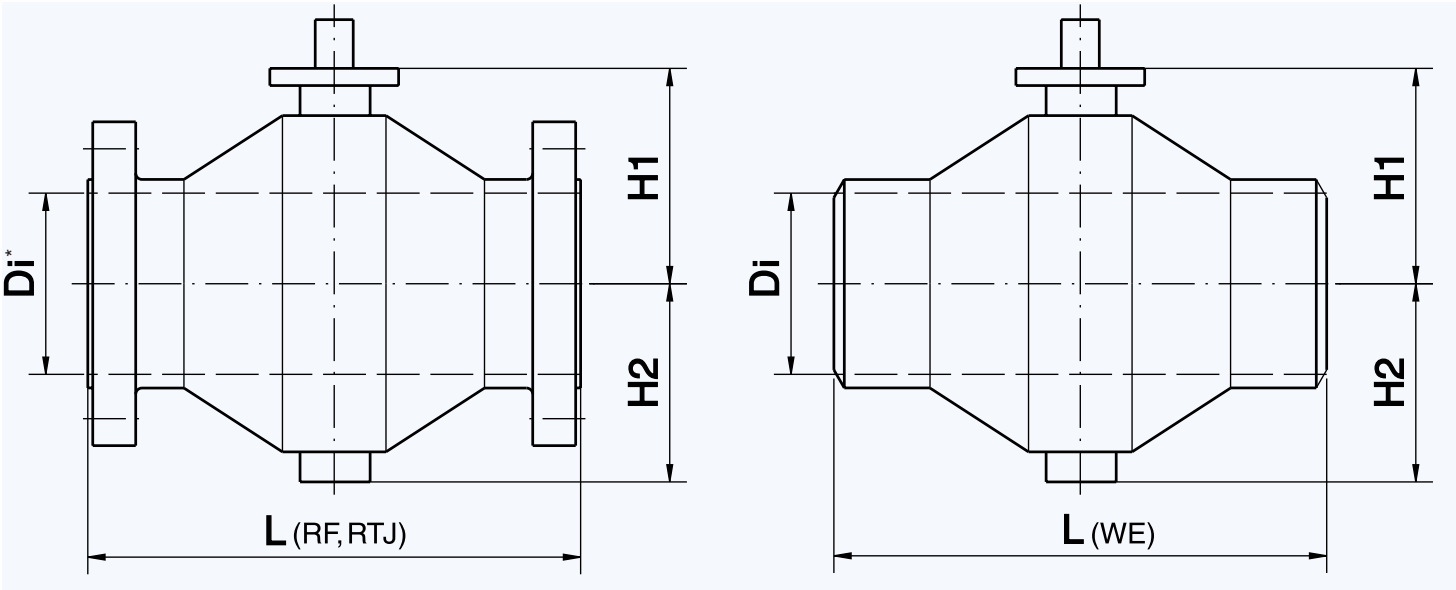

ANSI600

Nominal Size		Face to Face dimensions								Weight			
mm	inches	L(RF)		L(WE)		H1		H2		Flange		Welded	
		mm	inches	mm		mm	inches	mm	inches	kg	lb	kg	lb
25	1	216	8.50	216	8.50	55	2.17	29	1.14	6	13.00	3	7.00
50	2	292	11.50	292	11.50	78	3.07	61	2.40	17	37.00	10	22.00
80	3	356	14.02	356	14.02	160	6.30	116	4.57	41	90.00	32	71.00
100	4	432	17.01	432	17.01	192	7.56	135	5.31	72	159.00	56	123.00
150	6	559	22.01	559	22.01	228	8.98	178	7.01	157	346.00	115	254.00
200	8	660	25.98	660	25.98	295	11.61	224	8.82	300	661.00	225	496.00
250	10	787	30.98	787	30.98	343	13.50	275	10.83	455	1003.00	365	805.00
300	12	838	32.99	838	32.99	403	15.87	320	12.60	690	1521.00	590	1301.00
350	14	889	35.00	889	35.00	451	17.76	363	14.29	980	2161.00	830	1830.00
400	16	991	39.02	991	39.02	492.5	19.39	400	15.75	1310	2888.00	1080	2381.00
450	18	1092	42.99	1030	40.55	548	21.57	458	18.03	1770	3902.00	1490	3285.00
500	20	1194	47.01	1090	42.91	603.5	23.76	504	19.84	2210	4872.00	1830	4034.00
550	22	1295	50.98	1130	44.49	649	25.55	551	21.69	2720	5997.00	2250	4960.00
600	24	1397	55.00	1245	49.02	688	27.09	594	23.39	3400	7496.00	2950	6504.00
700	28	1549	60.98	1295	50.98	742	29.21	661	26.02	4580	10097.00	3850	8488.00
750	30	1651	65.00	1346	52.99	785	30.91	711	27.99	5750	12677.00	4890	10781.00
800	32	1778	70.00	1397	55.00	852	33.54	774	30.47	7000	15432.00	6000	13228.00
900	36	2083	82.01	1499	59.02	912	35.91	830	32.68	8800	19401.00	7500	16535.00
1000	40	2165	85.24	2010	79.13	1110	43.70	978	38.50	10600	23369.00	9300	20503.00
1050	42	2240	88.19	2085	82.09	1163	45.79	1026	40.39	11700	25794.00	10400	22928.00
1200	48	2385	93.90	2210	87.01	1322	52.05	1192	46.93	18900	41667.00	16800	37038.00
1400	56	2710	106.69	2445	96.26	1530	60.24	1348	53.07	26800	59084.00	23800	52470.00

** Dimension Di supplied with drawing issued after receipt of order*

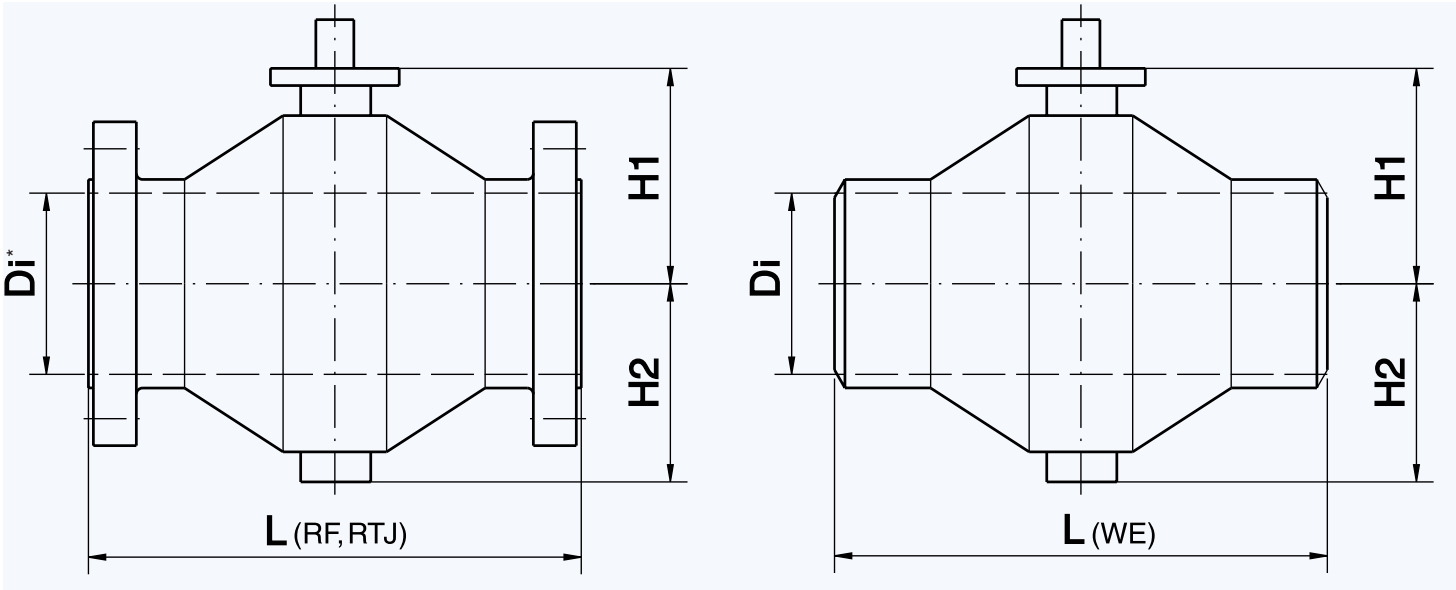

ANSI900

Nominal Size		Face to Face dimensions								Weight			
mm	inches	L(RF)		L(WE)		H1		H2		Flange		Welded	
		mm	inches	mm		mm	inches	mm	inches	kg	lb	kg	lb
25	1	216	8.50	216	8.50	55	2.17	29	1.14	7	15.00	3	7.00
50	2	368	14.49	292	11.50	78	3.07	61	2.40	23	51.00	10	22.00
80	3	381	15.00	356	14.02	160	6.30	116	4.57	49	108.00	32	71.00
100	4	457	17.99	432	17.01	192	7.56	135	5.31	83	183.00	56	123.00
150	6	610	24.02	559	22.01	228	8.98	178	7.01	185	408.00	115	254.00
200	8	737	29.02	660	25.98	295	11.61	224	8.82	395	871.00	230	507.00
250	10	838	32.99	787	30.98	343	13.50	275	10.83	620	1367.00	405	893.00
300	12	965	37.99	838	32.99	413	16.26	330	12.99	920	2028.00	670	1477.00
350	14	1029	40.51	889	35.00	461	18.15	373	14.69	1280	2822.00	920	2028.00
400	16	1130	44.49	991	39.02	505	19.88	412.5	16.24	1620	3571.00	1210	2668.00
450	18	1219	47.99	1030	40.55	563	22.17	471	18.54	2100	4630.00	1650	3638.00
500	20	1321	52.01	1190	46.85	621.5	24.47	519	20.43	2680	5908.00	2040	4497.00
550	22	1422	55.98	1130	44.49	671	26.42	566	22.28	3420	7540.00	2750	6063.00
600	24	1549	60.98	1295	50.98	708	27.87	615	24.21	4290	9458.00	3320	7319.00
700	28	1549	60.98	1359	53.50	772	30.39	685	26.97	6100	13448.00	4950	10913.00
750	30	1651	65.00	1422	55.98	820	32.28	740	29.13	7800	17196.00	6500	14330.00
800	32	1778	70.00	1486	58.50	887	34.92	805	31.69	9750	21495.00	7800	17196.00
900	36	2083	82.01	1625	63.98	945	37.20	865	34.06	13900	30644.00	10400	22928.00
1000	40	2225	87.60	2010	79.13	1120	44.09	995	39.17	17800	39242.00	14700	32408.00
1050	42	2285	89.96	2085	82.09	1187	46.73	1055	41.54	19600	43211.00	16300	35935.00
1200	48	2460	96.85	2210	87.01	1380	54.33	1215	47.83	28500	62832.00	24500	54013.00

** Dimension Di supplied with drawing issued after receipt of order*

BÖHMER GmbH
BALL VALVES

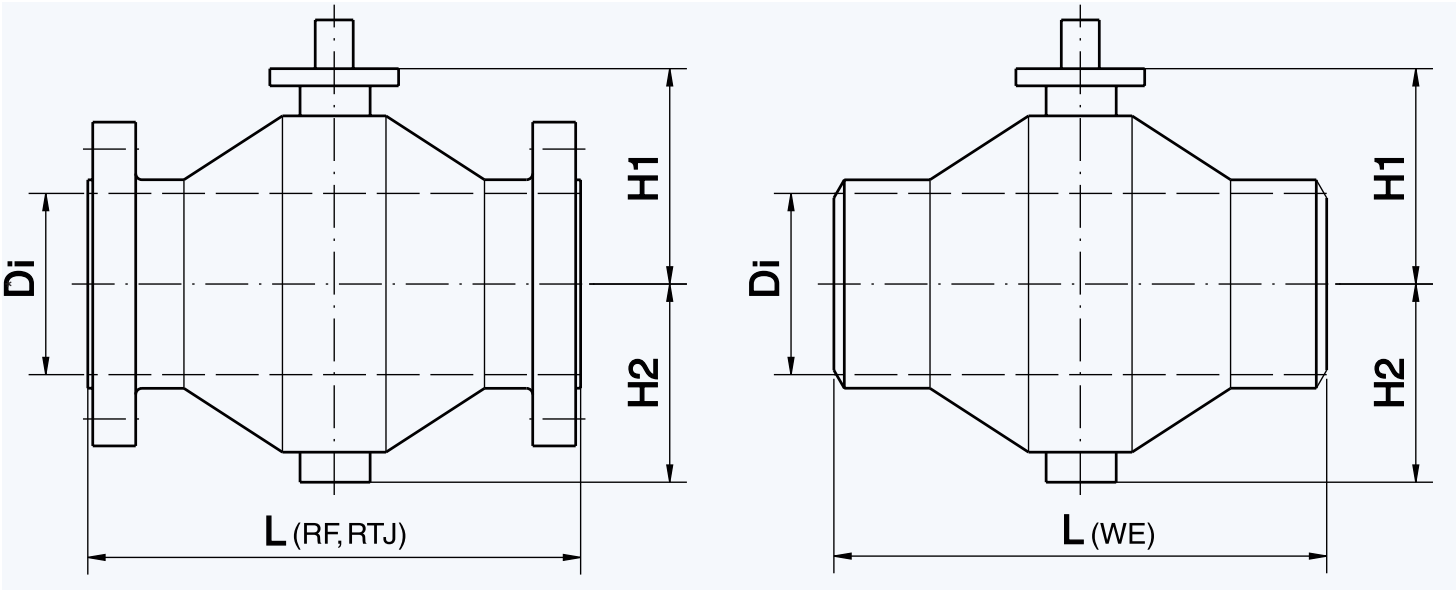

ANSI1500

Nominal Size		Face to Face dimensions								Weight			
mm	inches	L(RF)		L(WE)		H1		H2		Flange		Welded	
		mm	inches	mm		mm	inches	mm	inches	kg	lb	kg	lb
25	1	254	10.00	254	10.00	60	2.36	35	1.38	21	46.00	13	29.00
50	2	368	14.49	368	14.49	85	3.35	70	2.76	35	77.00	18	40.00
80	3	470	18.50	410	16.14	175	6.89	131	5.16	73	161.00	48	106.00
100	4	546	21.50	470	18.50	212	8.35	155	6.10	126	278.00	88	194.00
150	6	705	27.76	580	22.83	253	9.96	203	7.99	255	562.00	165	364.00
200	8	832	32.76	710	27.95	330	12.99	254	10.00	625	1378.00	410	904.00
250	10	991	39.02	820	32.28	388	15.28	310	12.20	845	1863.00	650	1433.00
300	12	1130	44.49	940	37.01	463	18.23	382	15.04	1430	3153.00	1120	2469.00
350	14	1257	49.49	1075	42.32	527	20.75	433	17.05	1900	4189.00	1430	3153.00
400	16	1384	54.49	1200	47.24	575	22.64	482.5	19.00	2400	5291.00	1750	3858.00
450	18	1537	60.51	1254	49.37	533	20.98	474	18.66	3100	6834.00	2100	4630.00
500	20	1664	65.51	1295	50.98	743	29.25	612	24.09	3900	8598.00	2850	6283.00
600	24	1950	76.77	1390	54.72	849	33.43	753	29.65	5600	12346.00	4500	9921.00
700	28			1497	58.94	1001	39.41	859	33.82	7900	17417.00	6600	14551.00
750	30			1575	62.01	1078	42.44	910	35.83	10000	22046.00	8500	18739.00
800	32			1610	63.39	1120	44.09	965	37.99	12800	28219.00	11000	24251.00
900	36			1770	69.69	1235	48.62	1080	42.52	17400	38360.00	15000	33069.00

** Dimension Di supplied with drawing issued after receipt of order*

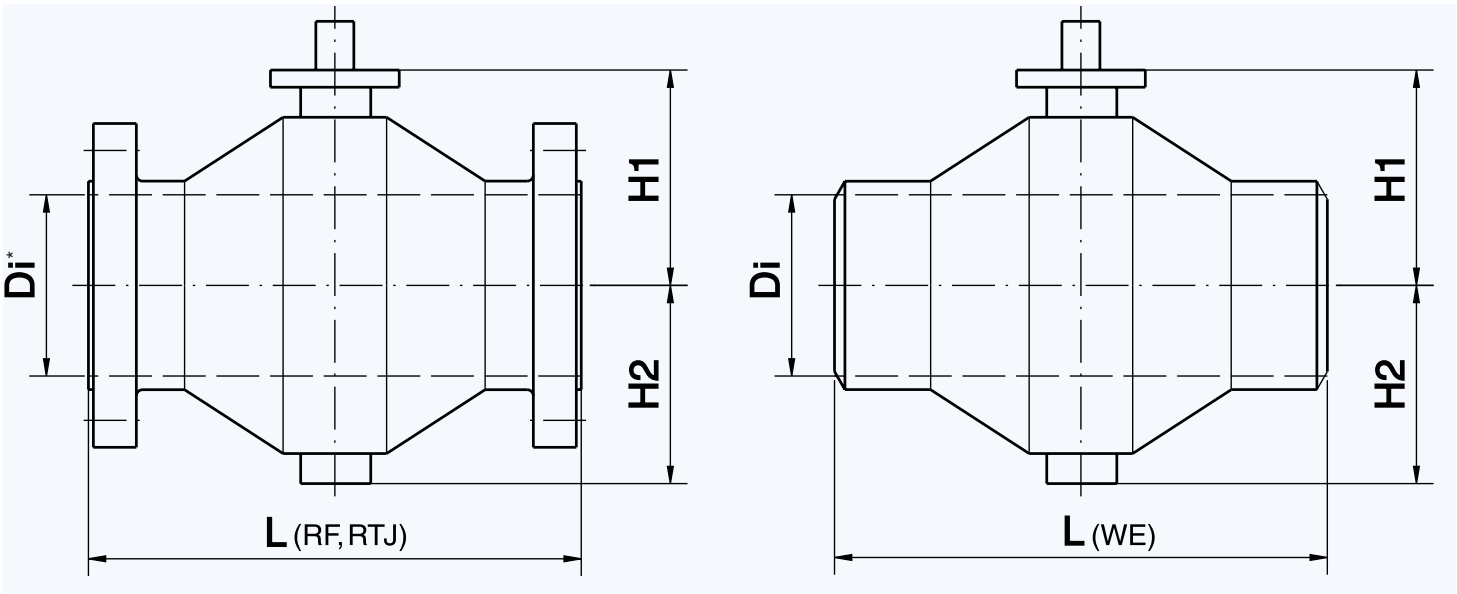

ANSI2500

Nominal Size		Face to Face dimensions								Weight			
mm	inches	L(RF)		L(WE)		H1		H2		Flange		Welded	
		mm	inches	mm		mm	inches	mm	inches	kg	lb	kg	lb
25	1	254	10.00	254	10.00					37	82.00	20	44.00
50	2	451	17.76	368	14.49	145	5.71	105	4.13	82	181.00	36	79.00
80	3	578	22.76	410	16.14	195	7.68	155	6.10	175	386.00	80	176.00
100	4	673	26.50	490	19.29	232	9.13	180	7.09	340	750.00	185	408.00
150	6	914	35.98	610	24.02	285	11.22	234	9.21	770	1698.00	380	838.00
200	8	1022	40.24	870	34.25	363	14.29	290	11.42	1250	2756.00	720	1587.00
250	10	1270	50.00	995	39.17	415	16.34	345	13.58	2000	4409.00	1050	2315.00
300	12	1422	55.98	1145	45.08	498	19.61	415	16.34	2700	5952.00	1400	3086.00

MATERIALS

The materials which are mentioned in the table are the Boehmer standard materials . They comply to the most common national and international standards.

Other materials, which may be necessary due to special applications/conditions (such as corrosion/abrasion as well as temperature etc.) or customers´ demands are deliverable on request.

BOEHMER BALL VALVES STANDARD MATERIALS

Body: ASTM 350LF2; ASTM A106

Ball: ASTMA350LF2; ASTMA105; ASTMA395 + ENP or hardchrome; stainless steel

Seat rings: ASTM 350LF2; ASTM A105 + ENP or hardchrome; stainless steel

O-Rings: FPM; EPDM; NBR; HNBR

Seat Insert: FPM; PTFE; PTFE-filled

BALL VALVES WITH ACTUATORS

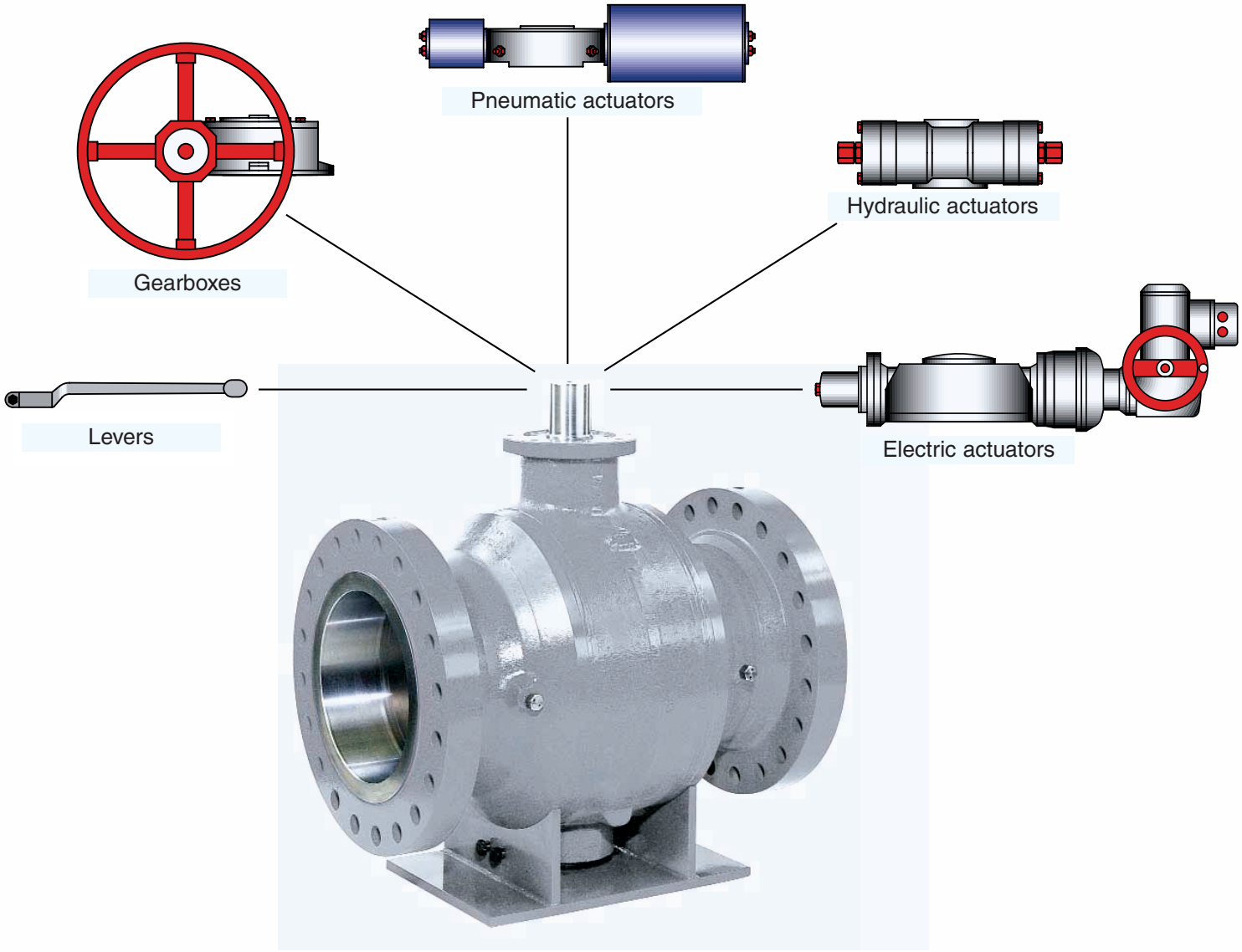

ALL TYPES OF ACTUATORS AND MANUFACTURES ARE DELIVERABLE

Besides the range of application the working conditions determine the torque rating. For detailed determination of the actuators and the relevant accessories our specialists will be at your service.

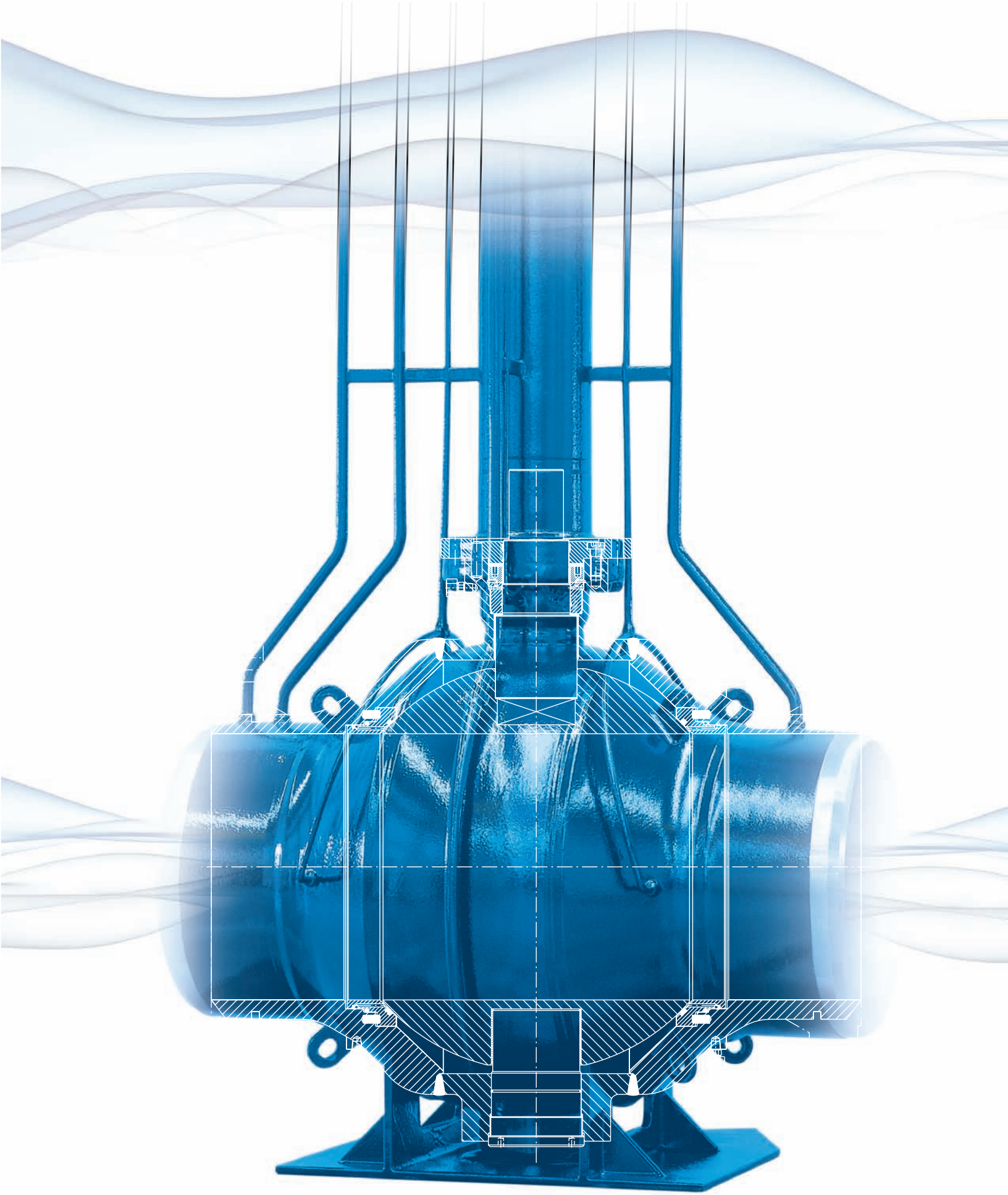

BÖHMER

BALL VALVES

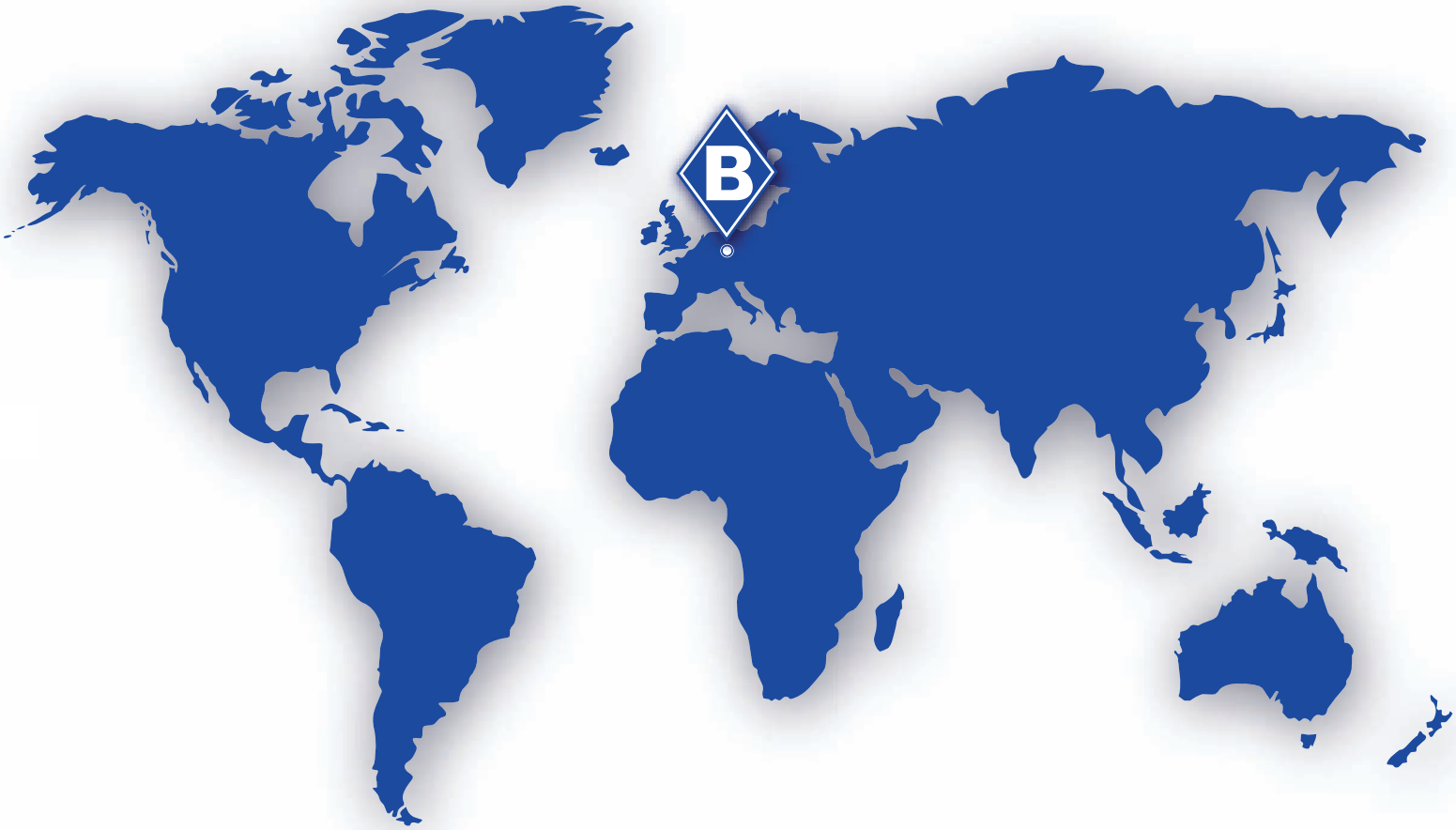

Simply The Best!

Boehmer GmbH Headquarters
P.O. Box 91 12 20 | D-45537 Sprockhoevel | Germany
Phone +49 2324 7001- 0 | Fax +49 2324 7001-79
Web **www.boehmer.de** | E-mail **boehmer@boehmer.de**

Boehmer GmbH Subsidiary Hattingen
Am Walzwerk 5 | D-45527 Hattingen | Germany
Phone +49 2324 9547 - 0 | Fax +49 2324 9547-11
Web **www.boehmer.de** | E-mail **boehmer@boehmer.de**

Boehmer GmbH North America Sales Office
Williams Tower | 2800 Post Oak Boulervard | Houston, Texas 77056
Phone +1 281 635 3176 | E-mail: **heon-roberts@boehmer.de**

Boehmer GmbH Canada Sales Office
443 Lindsay Street | Drummondville, Québec, Canada J2B 1G9
Phone + 1 819 475 6640 | E-mail: **heon-roberts@boehmer.de**