GE Oil & Gas

Becker*
VRP-SB-PID Series
Natural Gas Controllers

Instruction Manual

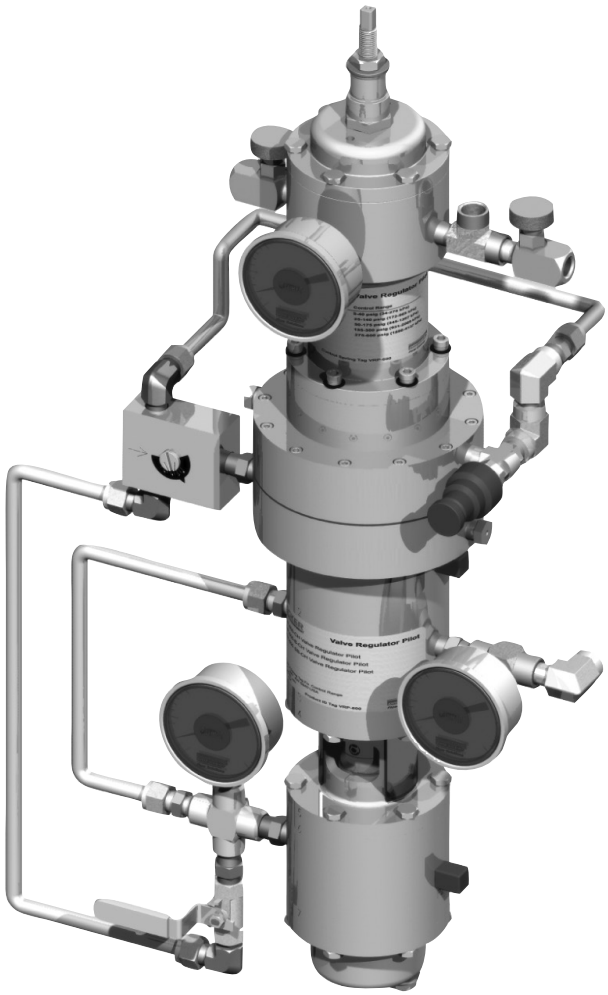

GE Data Classification : Public

THESE INSTRUCTIONS PROVIDE THE CUSTOMER/OPERATOR WITH IMPORTANT PROJECT-SPECIFIC REFERENCE INFORMATION IN ADDITION TO THE CUSTOMER/OPERATOR'S NORMAL OPERATION AND MAINTENANCE PROCEDURES. SINCE OPERATION AND MAINTENANCE PHILOSOPHIES VARY, GE (GENERAL ELECTRIC COMPANY AND ITS SUBSIDIARIES AND AFFILIATES) DOES NOT ATTEMPT TO DICTATE SPECIFIC PROCEDURES, BUT TO PROVIDE BASIC LIMITATIONS AND REQUIREMENTS CREATED BY THE TYPE OF EQUIPMENT PROVIDED.

THESE INSTRUCTIONS ASSUME THAT OPERATORS ALREADY HAVE A GENERAL UNDERSTANDING OF THE REQUIREMENTS FOR SAFE OPERATION OF MECHANICAL AND ELECTRICAL EQUIPMENT IN POTENTIALLY HAZARDOUS ENVIRONMENTS. THEREFORE, THESE INSTRUCTIONS SHOULD BE INTERPRETED AND APPLIED IN CONJUNCTION WITH THE SAFETY RULES AND REGULATIONS APPLICABLE AT THE SITE AND THE PARTICULAR REQUIREMENTS FOR OPERATION OF OTHER EQUIPMENT AT THE SITE.

THESE INSTRUCTIONS DO NOT PURPORT TO COVER ALL DETAILS OR VARIATIONS IN EQUIPMENT NOR TO PROVIDE FOR EVERY POSSIBLE CONTINGENCY TO BE MET IN CONNECTION WITH INSTALLATION, OPERATION OR MAINTENANCE. SHOULD FURTHER INFORMATION BE DESIRED OR SHOULD PARTICULAR PROBLEMS ARISE WHICH ARE NOT COVERED SUFFICIENTLY FOR THE CUSTOMER/OPERATOR'S PURPOSES THE MATTER SHOULD BE REFERRED TO GE.

THE RIGHTS, OBLIGATIONS AND LIABILITIES OF GE AND THE CUSTOMER/OPERATOR ARE STRICTLY LIMITED TO THOSE EXPRESSLY PROVIDED IN THE CONTRACT RELATING TO THE SUPPLY OF THE EQUIPMENT. NO ADDITIONAL REPRESENTATIONS OR WARRANTIES BY GE REGARDING THE EQUIPMENT OR ITS USE ARE GIVEN OR IMPLIED BY THE ISSUE OF THESE INSTRUCTIONS.

THESE INSTRUCTIONS ARE FURNISHED TO THE CUSTOMER/OPERATOR SOLELY TO ASSIST IN THE INSTALLATION, TESTING, OPERATION, AND/OR MAINTENANCE OF THE EQUIPMENT DESCRIBED. THIS DOCUMENT SHALL NOT BE REPRODUCED IN WHOLE OR IN PART WITHOUT THE WRITTEN APPROVAL OF GE.

Table of Contents

Introduction

GE's Becker VRP-SB-PID series Natural Gas Controller represents a breakthrough in pressure control technology for the natural gas industry. Built to exacting specifications, this easily maintained unit offers highly accurate control in a broad range of operating environments. In addition to minimizing bleed gas, the VRP-SB-PID series controllers are designed such that their bleed gas can be routed to a lower pressure fuel gas system, eliminating atmospheric bleed gas completely. The elimination of this expensive bleed gas ultimately saves a significant amount of money for the operating company and reduces the environmental impact of atmospheric hydrocarbons, and diminishing natural resources.

Your VRP-SB-PID controller will come factory adjusted for your particular application. The use of the adjustment procedures in this manual will only become necessary upon installation of a rubber goods replacement kit, or any other disassembly or reassembly of the controller.

Description

The Becker VRP-SB-PID is a proportional-integral-derivative controller. This concept will be further explained in the operations section of this manual. The VRP-SB-PID can operate as a controller working in tandem with a positioner. It can also operate as a high-pressure controller, controlling a single acting actuator without the need for a positioner.

Another advantage of the VRP-SB-PID is its versatility. With a few adjustments the VRP-SB-PID can be transformed into a proportional plus derivative controller or VRP-SB-PD. In VRP-SB-PD mode the controller can be used for highly unstable systems for example, double stage cuts.

Scope of this Manual

This manual provides information on operation principles, applications, installation, adjustment, and maintenance of the VRP-SB-PID. For information concerning actuators, valves, and accessories, refer to the instruction manuals provided with the specific product.

Note: Only those qualified through training or experience should install, operate, or maintain Becker controllers. If there are any questions concerning these instructions, contact your sales representative, sales office, or manufacturer before proceeding.

Technical Assistance

Should you have any questions, please contact your local GE sales representative or technical assistance at:

GE Oil & Gas

Attn: Becker Control Valves Technical Assistance
12970 Normandy Boulevard
Jacksonville, FL 32221
USA
Tel. +1-844-VALVE-GE
www.geoilandgas.com/valves

Technical Information

Table 1: Technical Specifications

Technical Specifications	
Maximum Control Pressure	1500 psig 10,342 kPa
Power Gas Requirements	Dry, filtered (40 micron) gas. Sufficient pressure to operate positioner or actuator
Power Gas Maximum Pressure	40, 80, 125 psig
Bleed to Pressure System (BPS)	25 psig maximum
Output Signal	Three models are available depending on the maximum power gas pressure. 40, 80 and 125 psig.
Output Capacity	1.5 Cv maximum
Action	Direct and reverse acting
Control Accuracy	3/4% of setpoint pressure
Resolution	0.2% of setpoint pressure
Operative Ambient Temperature Range	-20°F to 160°F -29°C to 71° C
Steady State Gas Consumption	Zero
Approximate Weight	20 pounds 9kg
Pressure Connections	1/4 inch female NPT
Housing	Meets NEMA 3 Classification (Weather tight)
Installation Orientation	Controller should be installed in the vertical position

Model Number

The VRP-SB-PID model number is an alphanumeric combination, which characterizes your specific unit. This number can be found on the name tag located on the spring cartridge.

Example: VRP-600-SB-PID-40

VRP = Valve Regulator Pilot/Controller

600 = Maximum allowable control pressure

SB = Single Acting

PID = Proportional, Integral, Derivative Control

40 = Maximum power gas

Each unit has a stainless steel control tag fastened under one of the bolts of the spring cartridge. The range of the control spring is stamped on the face side of the tag. The shipping date and seven-character part number are stamped on the bottom side of the tag.

Table 2: Materials of Construction

Materials of Construction	
External Parts	Anodized 2024 aircraft alloy aluminum[1]
Internal Parts	316 stainless steel and 2024 anodized aluminum
Springs	Alloy Steel
Diaphragms	Buna-N reinforced by nylon fabric
Seats and O-Rings	Buna-N
Tubing	316 stainless steel
Fittings	316 stainless steel
Gauges	2-1/2 inch dial liquid filled stainless steel connection w/stainless steel case

[1] All stainless steel external construction available. Exterior or corrosion resistant coating also available.

Example

A. Typical spring + diaphragm actuator w/ Globe Valve.

   Power gas = 40 psig max.

   Typical bench set 11 to 23

   BPS available up to 5 psig (fuel system or low pressure distribution)

B. Typical spring + piston actuator.
   Power gas = 150 psi max. with BPS = 25 psig max.

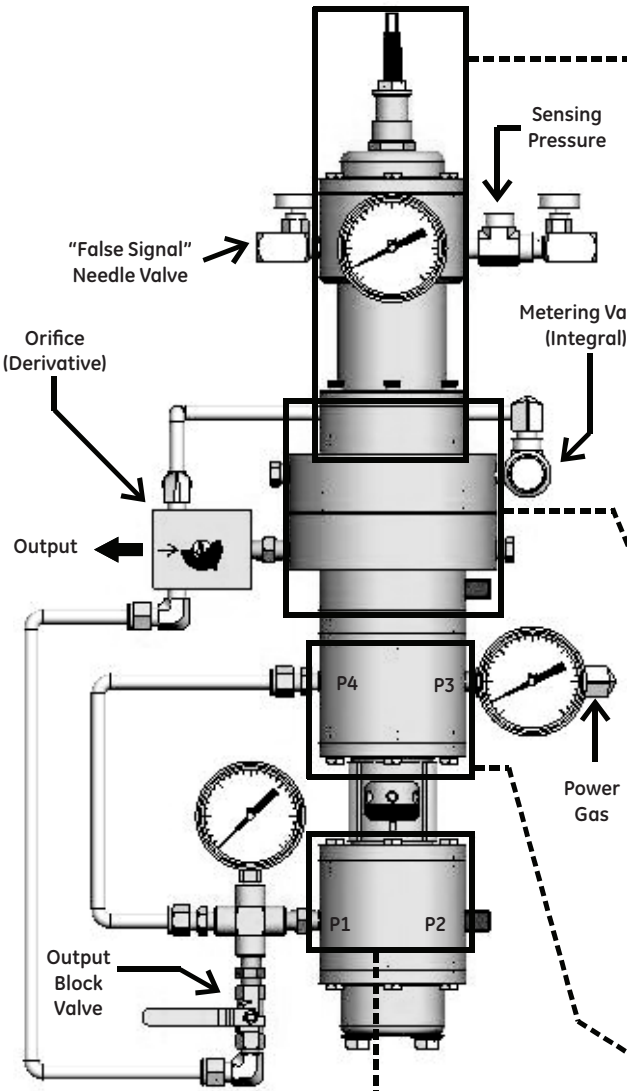

Figure 1A

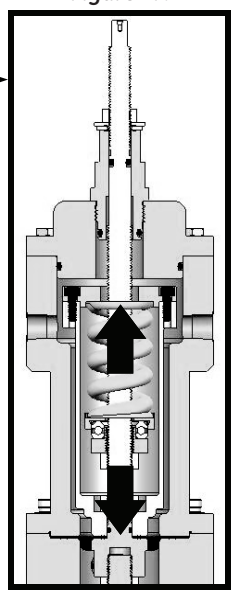

The arrows in Figure 1A represent the steady state or "balanced" condition where the spring force and force on the sensing diaphragm are equal. If the sensing pressure increases, the net force on the sensing diaphragm is down. If the sensing pressure decreases, the net force on the diaphragm is up. When spring and sensing diaphragm forces are equal to each other, the controller is balanced, and at steady state. In the additional diagrams (1C, 1D) the dynamics of balance valves for a decrease in setpoint is shown.

A high gain controller uses small rings (shown in Figure 1B). Middle gain controllers use large rings (shown below). Low gain pilots use no rings.

Figure 1B

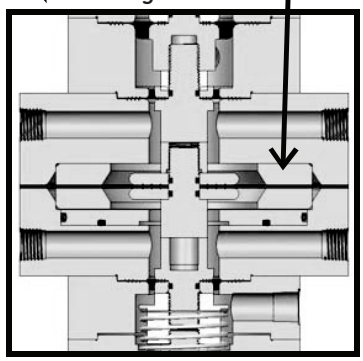

The derivative function is introduced by applying a portion of the output signal to the bottom of the feed-back diaphragm. The orifice is adjusted to ensure system stability. The integral function is introduced by applying a portion of the output signal to the top of the feedback diaphragm. The metering valve provides adjustability of reset rate.

Figure 1D

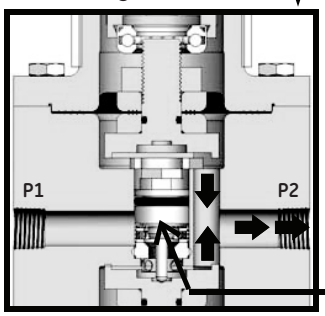

In the case of a decrease in sensing pressure, the bottom balance valve will open and the controller will bleed gas.

Bottom Balance Valve

Figure 1C

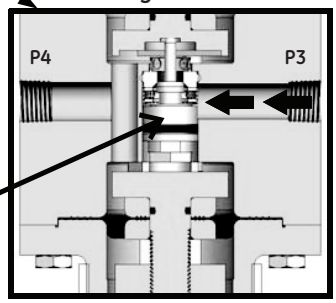

Top Balance Valve

In the case of a decrease in sensing pressure, the top balance valve closes, and cuts off the power gas. Arrows in figures 1C and 1D represent the direction of gas flow.

Figure 1 - Principles of Operation
Direct Acting VRP-600-SB-PID-40 (High Gain) Yellow Spring

Principles of Operation

Direct Acting VRP-SB-PID Controller (Figure 2)

When the measured variable pressure (sensing pressure) is equal to the setpoint, the net force on the sensing diaphragm is zero. This is the equilibrium or "balanced" condition where the sensing pressure that pushes down on the sensing diaphragm, and the spring force that pulls up on the sensing diaphragm are equal. From this position two possible scenarios can occur, the sensing pressure can rise above or below the setpoint.

If the sensing pressure rises above the setpoint the net force on the sensing diaphragm is downward. The bottom balance valve will close. The top balance valve opens, increasing the flow of power gas to the output port. The combination of these actions creates a rise in output pressure. When the sensing pressure falls below the setpoint the net force on the sensing diaphragm is upward. Now the top balance valve will close. The bottom balance valve opens, increasing the flow of gas to the exhaust port. The combination of these actions decreases the output pressure.

In order to control how much gas passes through the balance valve, the output pressure is fed back to the bottom side of a diaphragm within the feedback module. As the output pressure increases, this feedback pressure closes the inlet balance valve. As the output pressure decreases, this feedback pressure decreases, closing the exhaust balance valve. This feedback force is such that the output pressure will change proportionally with the deviation of the sensing pressure from the setpoint, which gives us a proportional response.

By restricting the flow of the output pressure to the bottom side of the feedback diaphragm, a derivative function is introduced. This is accomplished with an adjustable orifice that controls the flow to the bottom side of the feedback diaphragm. This orifice delays the feedback force, allowing the output to change quickly in response to a quick change in the system. Slow changes in the system; however, are less affected by the derivative orifice because the output pressure has time to equalize on both sides of the orifice. The adjustability of the orifice allows us to optimize the system. If the restriction is too great, the feedback delay will be too long and the system will become unstable.

It is already established that the change in output pressure is proportional to the deviance of the sensing pressure. Because of this, a sensing pressure that is not at the setpoint is required to maintain a particular change in output pressure. The difference between the setpoint and the maintained pressure at a particular output pressure is the "offset". This offset can be eliminated over time by allowing the top side of the feedback diaphragm to slowly equalize with the bottom side. By using a metering valve to control the flow to the top side of the feedback diaphragm we introduce our integral function. This adjustment also allows us to optimize the system. If the top side of the diaphragm equalizes with the bottom side too quickly, the feedback function providing proportionality is cancelled out and control will become unstable.

Reverse Acting VRP-SB-PID Controller (Figure 3)

In this case, the power gas is fed through the bottom balanced valve instead of the top. The exhaust now vents from the top balanced valve, and use of the feedback chamber is reversed. This simply means that the adjustable orifice controls the flow to the top feedback chamber, and the metering valve controls the flow to the bottom feedback chamber.

If the sensing pressure rises above the setpoint then the net force on the sensing diaphragm is down. The bottom balanced valve will close. The top balanced valve opens, allowing gas to vent through the exhaust port. The combination of these actions results in a decrease in output pressure. If the sensing pressure falls below the setpoint, the net force on the diaphragm is upward. The bottom balanced valve opens, increasing the flow of power gas to the output. The top balanced valve will close. This combination creates a rise in output pressure.

As the name implies, the dynamics are completely "reversed" from the direct acting configuration. The same can be said about the feedback chamber dynamics. The output pressure is now fed into the top side of the feedback diaphragm, while elimination of the "offset" is accomplished by feeding the output pressure to the bottom side of the feedback diaphragm.

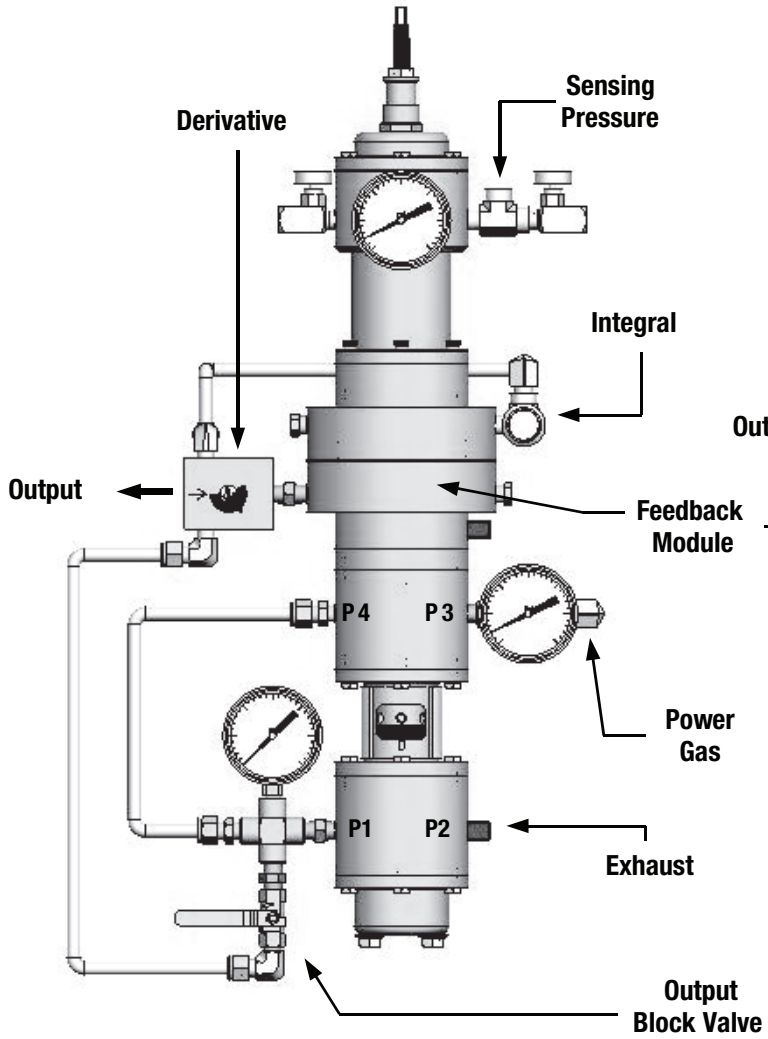

Figure 2 - Direct Acting VRP-SB-PID

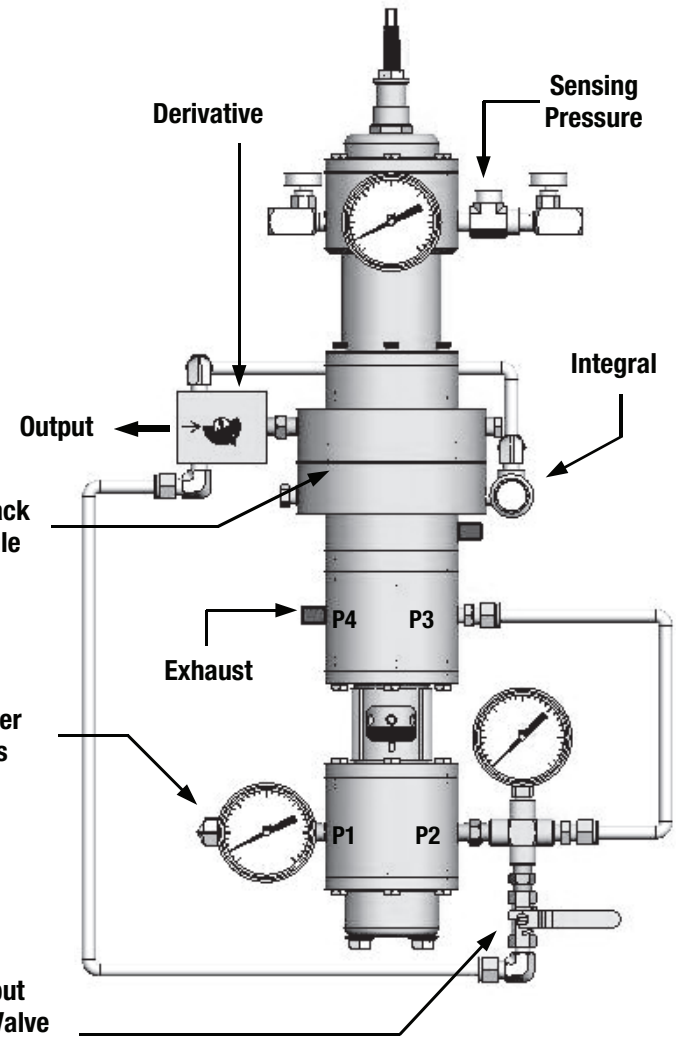

Figure 3 - Reverse Acting VRP-SB-PID

Control Spring Range Selection for VRP-SB-PID Controllers

Table 3 - Control Spring Range Selection for VRP-SB-PID-40

VRP-SB-PID Model No.	Control Range (pisg/kPa)	Spring Color (Part Number)	Proportional Band with 3-15 psig (21-103 kPa) Output			Setpoint Change per Revolution of Setpoint Screw (psig/kPa)	Setpoint Range Discreet Remote Control (SM-1100)	Setpoint Range Analog (4-20 mA) Remote Control (SM-1000)
			No Rings	Large Rings	Small Rings			
VRP-600-SB-PID-40	35-60 psig (241-414 kPa)	Gold (25-8236)				2.1 psig (14.5 kPa)	11.6 psig (80 kPa)	25 psig (172 kPa)
	45-135 psig (310-931 kPa)	Beige (25-8238)				7.4 psig (51 kPa)	41 psig (283 kPa)	90 psig (631 kPa)
	70-195 psig (483-1345 kPa)	Burgundy (25-8239)	51 pisg (352 kPa)	36 psig (248 kPa)	23 pisg (159 kPa)	11.3 pisg (78 kPa)	62 psig 427 kPa)	125 psig (862 kPa)
	155-320 psig (1069-2206 kPa)	Pink (25-8240)				24 psig (165 kPa)	132 psig (910 kPa)	165 psig (1138 kPa)
	295-600 psig (2034-4137 kPa)	Yellow (25-1306)				85 psig (586 kPa)	405 psig (2792 kPa)	405 psig (2792 kPa)
VRP-1000-SB-PID-40	115-300 psig (793-2275 kPa)	Burgundy (25-8239)				19.2 psig (132 kPa)	106 psig (731 kPa)	215 psig (1482 kPa)
	260-540 psig (1793-3723 kPa)	Pink (25-8240	87 psig (600 kPa)	61 psig (421 kPa)	39 psig (270 kPa)	41 psig (283 kPa)	226 psig (1558 kPa)	280 psig (1931 kPa)
	500-1000 psig (3447-6895 kPa)	Yellow (25-1306)				143 psig (989 kPa)	680 pisg (4688 kPa)	680 pisg (4688 kPa)
VRP-1500-SB-PID-40	800-1300 psig (5654-8964 kPa)	Grey (25-1562	87 psig (600 kPa)	61 psig (421 kPa)	39 psig (270 kPa)	227 psig (1565 kPa)	830 psig (5723 kPa)	830 psig (5723 kPa)
	900-1500 psig (6205-10342 kPa)	Violet (25-8073)				276 psig (1903 kPa)	930 psig (6412 kPa)	930 psig (6412 kPa)

Repair Kit #30-9301 for VRP-600

Repair Kit #30-9307 for VRP-1000/1500

Sample Controller Gain Calculation:

VRP-600-SB-PID-40, High Gain (Small Rings), Yellow Spring

$$\text{Controller Gain (K)} = \frac{\text{Output Range}^{(1)}}{\text{Proportional Band}} = \frac{12 \text{ psig}}{23 \text{ psig}} = 0.522$$

[1]Output Range → 30 psig - 6 psig = 24 psig (165 kPa)

Table 4 - Control Spring Range Selection for VRP-SB-PID-80

VRP-SB-PID Model No.	Control Range (pisg/kPa)	Spring Color (Part Number)	Proportional Band with 6-30 psig (41-207 kPa) Output			Setpoint Change per Revolution of Setpoint Screw (psig/kPa)	Setpoint Range Discreet Remote Control (SM-1100)	Setpoint Range Analog (4-20 mA) Remote Control (SM-1000)
			No Rings	Large Rings	Small Rings			
VRP-600-SB-PID-80	70-160 psig (483-1103 kPa)	Beige (25-8238)	102 pisg (703 kPa)	72 psig (496 kPa)	46 pisg (317 kPa)	7.4 psig (51 kPa)	41 psig (281 kPa)	90 psig (621 kPa)
	95-220 psig (655-1517 kPa)	Burgundy (25-8239)				11.3 psig (78 kPa)	62 psig (429 kPa)	125 psig (862 kPa)
	180-345 psig (1241-2379 kPa)	Pink (25-8240)				24 pisg (165 kPa)	132 psig (910 kPa)	165 psig (1138 kPa)
	320-600 psig (2206-4137 kPa)	Yellow (25-1306)				85 psig (586 kPa)	380 psig (2620 kPa)	380 psig (2620 kPa)
VRP-1000-SB-PID-80	155-370 psig (1069-2551 kPa)	Burgundy (25-8239)	174 psig (1200 kPa)	122 psig (841 kPa)	78 psig (538 kPa)	19.2 psig (132 kPa)	106 psig (728 kPa)	215 psig (1482 kPa)
	300-580 psig (2069-4000 kPa)	Pink (25-8240)				41 psig (283 kPa)	226 psig (1558 kPa)	280 psig (1931 kPa)
	540-1000 psig (3723-6895 kPa)	Yellow (25-1306)				143 psig (989 kPa)	680 pisg (4516 kPa)	680 pisg (4516 kPa)
VRP-1500-SB-PID-80	860-1300 psig (5930-8964 kPa)	Grey (25-1562)	87 psig (600 kPa)	61 psig (421 kPa)	39 psig (270 kPa)	227 psig (1565 kPa)	805 psig (5550 kPa)	805 psig (5550 kPa)
	960-1500 psig (6619-10342 kPa)	Violet (25-8073)				276 psig (1903 kPa)	905 psig (6240 kPa)	905 psig (6240 kPa)

Repair Kit #30-9301 for VRP-600

Repair Kit #30-9307 for VRP-1000/1500

Sample Controller Gain Calculation:

VRP-600-SB-PID-80, Low Gain (No Rings), Yellow Spring

$$\text{Controller Gain (K)} = \frac{\text{Output Range}^{(1)}}{\text{Proportional Band}} = \frac{24 \text{ psig}}{102 \text{ psig}} = 0.235$$

[1]Output Range → 30 psig - 6 psig = 24 psig (165 kPa)

Table 5 - Control Spring Range Selection for VRP-SB-PID-125

VRP-SB-PID Model No.	Control Range (pisg/kPa)	Spring Color (Part Number)	Proportional Band with 40-70 psig (276-483 kPa) Output			Setpoint Change per Revolution of Setpoint Screw (psig/kPa)	Setpoint Range Discreet Remote Control (SM-1100)	Setpoint Range Analog (4-20 mA) Remote Control (SM-1000)
			No Rings	Large Rings	Small Rings			
VRP-600-SB-PID-125	115-195 psig (793-1345 kPa)	Beige (25-8238)	127.5 psig (879 kPa)	90 psig (621 kPa)	57.5 psig (396 kPa)	7.4 psig (51 kPa)	41 psig (281 kPa)	90 psig (621 kPa)
	130-225 psig (896-1758 kPa)	Burgundy (25-8239)				11.3 psig (78 kPa)	62 psig (429 kPa)	125 psig (862 kPa)
	215-380 psig (1482-2620 kPa)	Pink (25-8240)				24 psig (164 kPa)	132 psig (910 kPa)	165 psig (1138 kPa)
	355-600 psig (2448-4137 kPa)	Yellow (25-1306)				85 psig (586 kPa)	345 psig (2379 kPa)	345 psig (2379 kPa)
VRP-1000-SB-PID-125	215-430 psig (1482-2967 kPa)	Burgundy (25-8239)	217.5 psig (1500 kPa)	52 psig (1051 kPa)	97.5 psig (672 kPa)	19.2 psig (132 kPa)	106 psig (728 kPa)	215 psig (1482 kPa)
	360-640 psig (2482-4413 kPa)	Pink (25-8240)				41 psig (283 kPa)	226 psig (1558 kPa)	280 psig (1931 kPa)
	600-1000 psig (4137-6895 kPa)	Yellow (25-1306)				143 psig (989 kPa)	620 pisg (4275 kPa)	620 pisg (4275 kPa)
VRP-1500-SB-PID-125	920-1300 psig (6343-8964 kPa)	Grey (25-1562)	217.5 psig (1500 kPa)	52 psig (1051 kPa)	97.5 psig (672 kPa)	227 psig (1565 kPa)	770 psig (5309 kPa)	770 psig (5309 kPa)
	1020-1500 psig (7033-10342 kPa)	Violet (25-8073)				276 psig (1903 kPa)	870 psig (5998 kPa)	870 psig (5998 kPa)

Repair Kit #30-9301 for VRP-600

Repair Kit #30-9307 for VRP-1000/1500

Sample Controller Gain Calculation:

VRP-600-SB-PID-125, Low Gain (No Rings), Yellow Spring

$$\text{Controller Gain (K)} = \frac{\text{Output Range}^{(1)}}{\text{Proportional Band}} = \frac{30 \text{ psig}}{127.5 \text{ psig}} = 0.235$$

[1]Output Range → 30 psig - 6 psig = 24 psig (165 kPa)

Conversion to VRP-SB-PD Controller:

For highly unstable systems it may be necessary to convert the VRP-SB-PID into a VRP-SB-PD controller. In this case the controller will have a permanent offset due to an absence of the integral function.

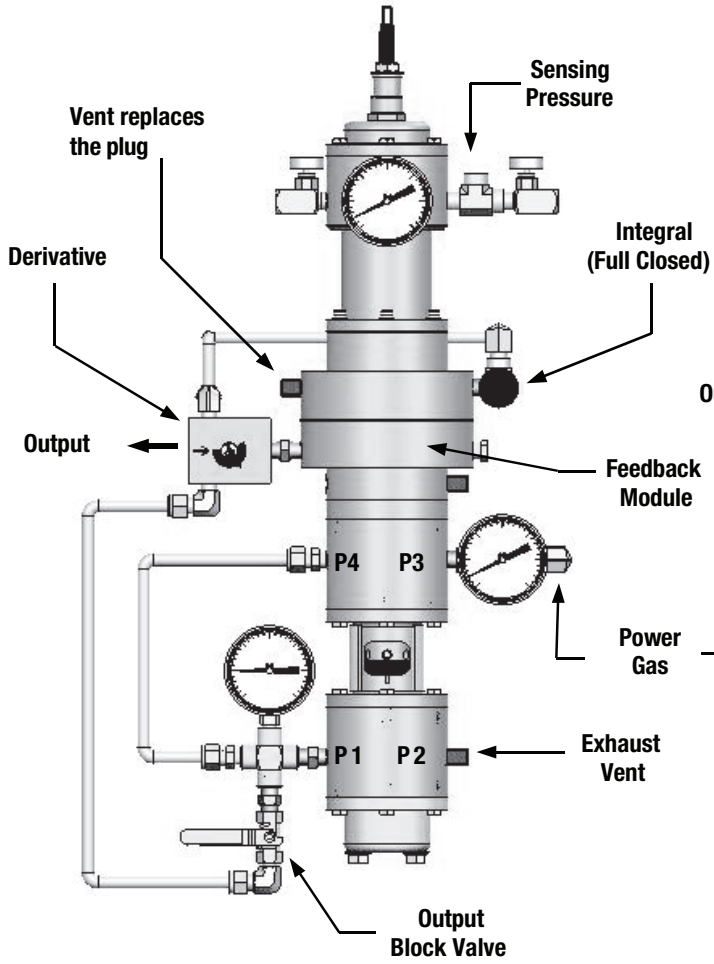

Figure 4 - Direct Acting VRP-SB-PID Controller

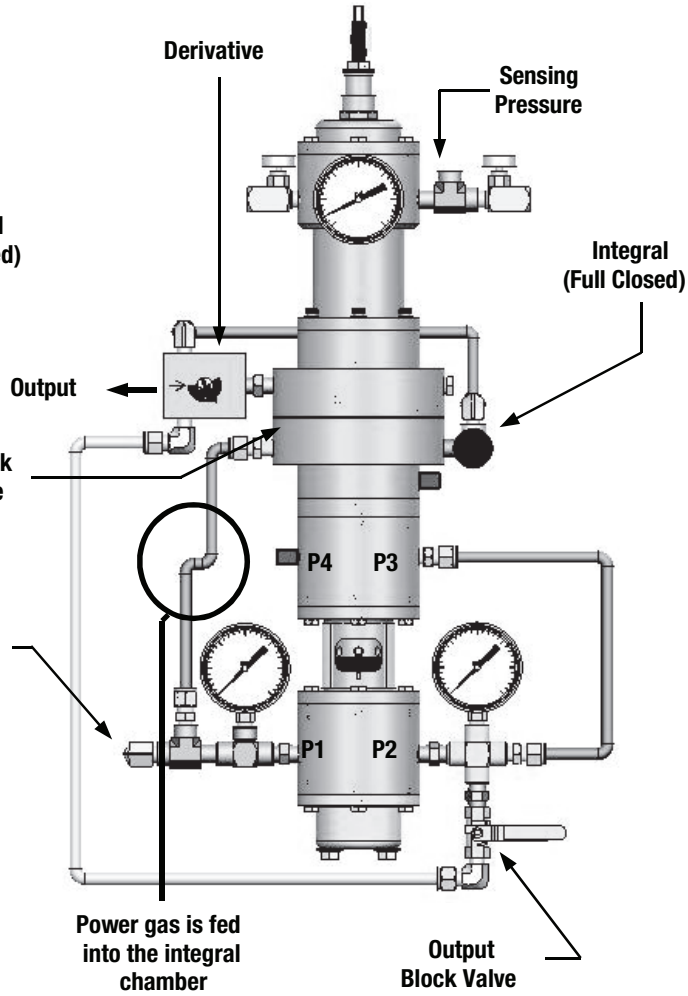

Figure 5 - Reverse Acting VRP-SB-PID Controller

Control Spring Range Selection for VRP-SB-PD Controllers

Table 6 - Control Spring Range Selection for VRP-SB-PD-40 Direct-Acting and Reverse-Acting Controller

VRP-SB-PD Model No.	Spring Color (Part Number)	No Rings Low Gain		Large Rings Medium Gain		Small Rings High Gain		Setpoint Change per Revolution of setpoint screw (psig/kPa)
		Control Range (psig/kPa)	Proportional Band w/3-15 psig (21-103 kPa) Output	Control Range (psig/kPa)	Proportional Band w/3-15 psig (21-103 kPa) Output	Control Range (psig/kPa)	Proportional Band w/3-15 psig (21-103 kPa) Output	
VRP-600-SB-PD-40	Beige (25-8238)	100-150 psig (689-1034 kPa)	51 psig (352 kPa)	90-150 psig (621-1034 kPa)	36 psig (248 kPa)	75-140 psig (517-965 kPa)	23 psig (159 kPa)	7.4 psig (51 kPa)
	Burgundy (25-8239)	130-220 psig (689-1034 kPa)		110-200 psig (758-1379 kPa)		100-200 psig (689-1379 kPa)		11.3 psig (78 kPa)
	Pink (25-8240)	230-350 psig (1586-2413 kPa)		200-340 psig (1379-2344 kPa)		180-330 psig (1241-2275 kPa)		24 psig (165 kPa)
	Yellow (25-1306)	350-600 psig (2413-4137 kPa)		330-600 psig (2275-4137 kPa)		320-600 psig (2206-4137 kPa)		85 psig (568 kPa)
VRP-1000-SB-PD-40	Beige (25-8238)	180-350 psig (1241-1724 kPa)	87 psig (600 kPa)	150-250 psig (1034-1724 kPa)	61 psig (421 kPa)	120-230 psig (827-1586 kPa)	39 psig (270 kPa)	12.6 psig (87 kPa)
	Burgundy (25-8239)	220-350 psig (1517-2413 kPa)		200-350psig (1379-2413 kPa)		160-340 psig 1103-2344 kPa)		19.2psig (132 kPa)
	Pink (25-8240)	350-590 psig (2413-4068 kPa)		340-570 psig (2344-3930 kPa)		310-550 psig (2137-3792 kPa)		41 psig (283 kPa)
	Yellow (25-1306)	590-1050 psig (4068-7239 kPa)		570-1050 psig (3930-7239 kPa)		550-1050 psig 3792-7239 kPa)		143 pisg (986 kPa)
VRP-1500-SB-PD-40	Grey (25-1562)	900-1350 psig (6205-9308 kPa)	87 psig (600 kPa)	850-1350 psig (5861-9308 kPa)	61 psig (421 kPa)	850-1350 psig (5861-9308 kPa)	39 psig (270 kPa)	227 psig (1565 kPa)
	Violet (25-8073)	1000-1500 psig (6895-10342 kPa)		950-1500 psig (6550-10342 kPa)		950-1500 psig (6550-10342 kPa)		276psig (1903 kPa)

Note: Refer to motor information specified in Tables 3 and 4.

Table 7 - Control Spring Range Selection for VRP-SB-PD-80 Direct-Acting and Reverse-Acting Controller

VRP-SB-PD Model No.	Spring Color (Part Number)	No Rings Low Gain		Large Rings Medium Gain		Small Rings High Gain		Setpoint Change per Revolution of setpoint screw (psig/kPa)
		Control Range (psig/kPa)	Proportional Band w/6-30 psig (41-207 kPa) Output	Control Range (psig/kPa)	Proportional Band w/6-30 psig (41-207 kPa) Output	Control Range (psig/kPa)	Proportional Band w/6-30 psig (41-207 kPa) Output	
VRP-600-SB-PD-80	Beige (25-8238)	N/A	102 psig (703 kPa)	N/A	72 psig (496 kPa)	N/A	46 psig (317 kPa)	7.4 psig (51 kPa)
	Burgundy (25-8239)	N/A		180-260 psig (1241-1793 kPa)		150-250 psig (1034-1724 kPa)		11.3 psig (78 kPa)
	Pink (25-8240)	300-400 psig (2068-2758 kPa)		250-390 psig (1724-2689 kPa)		340-370 psig (1655-2551 kPa)		24 psig (165 kPa)
	Yellow (25-1306)	400-600 psig (2758-4137 kPa)		380-600 psig (2620-4137 kPa)		370-600 psig (2551-4137 kPa)		85 psig (568 kPa)
VRP-1000-SB-PD-80	Beige (25-8238)	N/A	174 psig (1200 kPa)	N/A)	122 psig (841 kPa)	200-300 psig (1379-2086 kPa)	78 psig (538 kPa)	12.6 psig (87 kPa)
	Burgundy (25-8239)	N/A		310-430 psig (1379-2413 kPa)		250-400 psig 1724-2758 kPa)		19.2psig (132 kPa)
	Pink (25-8240)	500-700 psig (3447-4826 kPa)		430-660 psig (2965-4551 kPa)		400-630 psig (2758-4344 kPa)		41 psig (283 kPa)
	Yellow (25-1306)	700-1050 psig (4826-7239 kPa)		650-1050 psig (4482-7239 kPa)		620-1050 psig 4275-7239 kPa)		143 pisg (986 kPa)
VRP-1500-SB-PD-80	Grey (25-1562)	1000-1350 psig (6895-9308 kPa)	174 psig (1200 kPa)	1000-1350 psig (6895-9308 kPa)	122 psig (841 kPa)	950-1350 psig (6550-9308 kPa)	78 psig (538 kPa)	227 psig (1565 kPa)
	Violet (25-8073)	1100-1500 psig (7584-10342 kPa)		1100-1500 psig (7584-10342 kPa)		1050-1500 psig (7239-10342 kPa)		276psig (1903 kPa)

Note: Refer to motor information specified in Tables 3 and 4.

PID-40, PID-80, PID-125 Explanations

Why a PID-40, PID-80, or PID-125? To understand the reason why there are different PID models for higher power gas pressures, we must understand the concept of the "floating" diaphragm.

In the VRP-SB-PID feedback chamber there is a feedback diaphragm that introduces the feedback force to the controller. A closer look at the mechanisms that hold the diaphragm in place would show that it is "floating" - or not truly connected to the spring chamber or VRP-SB-CH body. The diaphragm works by transmitting forces through pistons that are connected to the spring chamber and VRP-SB-CH body. The only thing holding this diaphragm in place are the compressive forces from the spring chamber and VRP-SB-CH body. If we attempt to put 125 psig power gas through into a PID-40 there would not be enough of a compressive force to hold the feedback diaphragm in place, and it would separate. For the PID-40, the pressure that would cause this separation is 54 psig. For the PID-80 and PID-125, the pressures that cause separation are 100 psig, and 150 psig respectively.

This is an interesting phenomenon because if the diaphragm separates that doesn't mean the PID is damaged. All separation does is cause the controller to lock up, and cease operation. Upon change to the correct power gas, the controller will return to functioning completely normally with no damage to the parts.

In order to keep the diaphragm in the feedback chamber functioning properly, different springs are introduced into the bottom cap of the PID. These springs provide a different counter balance compressive forces that keep the feedback diaphragm operational. However, the stronger the spring inserted into the bottom cap of the PID, the less sensitive the PID becomes. There is a small trade-off involved, stronger springs such as the one in the bottom cap of the VRP-SB- PID-125 can handle the power gas for the higher pressure applications, but the minimum setpoint for control is also higher.

The springs in the bottom cap were designed according to the specifications of typical applications of the PID. One such example is the standard low pressure spring and diaphragm actuator application. The typical diaphragm rating for this kind of actuator is 40 psig, so a VRP-SB-PID-40 is an excellent fit for this application. The reason being, a VRP-SB-PID-40 has a maximum power gas of 40 psig, and the spring in the bottom cap is designed such that it provides the perfect counter balance force to keep the "floating" diaphragm operating correctly.

For the VRP-SB-PID-80 there are higher pressure applications such as the Welker Jet Regulator, or high pressure spring and diaphragm actuators. And for even higher pressure applications such as ball valves, the pressure needed to control can be as much as 125 psig. In this case, the model VRP-SB-PID-125 would be an excellent choice. In each of these higher pressure applications, the springs in the bottom cap of both the VRP-SB-PID-80 and VRP-SB-PID-125, are designed specifically for the purpose of keeping the "floating" diaphragm compressed and fully functional. Refer to page 27 for part numbers and section views of the 40, 80, and 125 bottom cap configurations.

Adjustment Procedure

1. Dead Band Adjustment

This adjustment is done by converting a VRP-SB-PID controller to a VRP-SB-CH controller.

A. Adjust supply regulator to desired pressure. The last digits in the model number represent the maximum supply gas for that model PID. Supply pressure should be set according to last digits in the model number, but it can be less than the maximum. For example, a PID-40 should have the supply pressure set at 40 psig (276 kPa), and a PID-125 should have supply pressure set at 125 psig (862 kPa). However, if the supply pressure to a PID-40 is 30 psig (207 kPa), that is acceptable, as long as the supply pressure does not go above 40 psig (276 kPa).

B. Close valve on measured variable line. Adjust measured variable in sensing chamber to the desired setpoint using false signal valves on the spring chamber.

C. Turn adjusting screw counterclockwise until it will not turn anymore. Do not force adjusting screw.

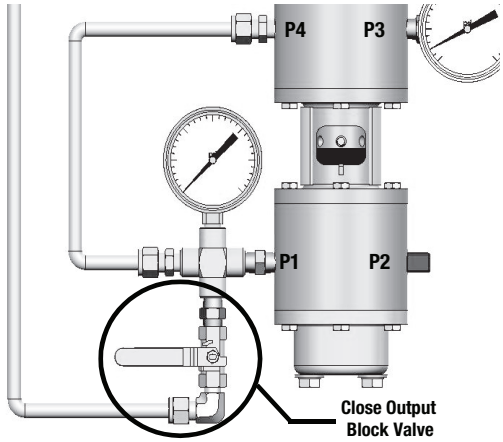

Figure 6 - Output Block Valve

D. Close output block valve (figure 6). Open integral (metering) valve, and derivative orifice to 6 (wide open).

E. Remove tubing which connects integral and derivative orifices.

F. If this is the first time that the unit is being adjusted after assembly, firstly remove the locking set screw from the radial hole in the adjustment drum. This may require the drum to be rotated until the hole containing the set screw can be accessed.

G. Turn sensitivity drum to the right as far as it will go (in the direction of increasing numbers). Then turn the drum one complete rotation to the left. Use the numbers on the drum as a guide (i.e. if you turn to the right and it stops on "7" then turn it back to the left until it rotates back to "7").

H. For a direct acting controller, turn the adjusting screw clockwise until the output gauge pressure just begins to decrease, then stop turning. At this point the gauge may decrease all the way to zero very quickly.

For a reverse acting controller turn the adjusting screw clockwise until the output gauge pressure just begins to increase then stop turning. At this point the gauge may increase to the maximum power gas very quickly.

In either case (reverse or direct acting), a quick response of the output needle suggests the sensitivity of the PID still needs tuning.

I. For a direct acting controller, turn the sensitivity drum to the right until the pressure just increases again. For a reverse acting controller, turn the sensitivity drum to the left until the pressure just decreases again.

J. Repeat steps H and I until output pressure is stationary between atmospheric pressure and maximum power gas pressure.

K. When the controller output is stationary between atmospheric and power gas pressure, and the sensitivity drum is adjusted such that any movement to the right would vent gas, the controller is approximately at "zero" dead band. "Zero" dead band is defined when a slow growing bubble (10-30 seconds) is detected from the exhaust port. Make small adjustments in adjustment drum until "zero" dead band condition is met.

L. To lock the deadband setting in place, insert the locking set screw into one of the radial holes in the adjustment drum. Using a torque wrench, torque to 1-2 inlb. Care should be taken not to exceed this level, as if the screw is over-tightened it may affect the calibration of the pilot. If a torque wrench is not available then torque the screw just enough so that it provides a light grip on the inner shaft. Recheck the vent port on the controller.

M. Reconnect all tubing disconnected in step E. Refer to Table 8 on page 13 for correct derivative orifice and metering valve settings. Open the measured variable valve. Open the output block valve in order to begin control and make fine adjustments.

2. Proportional Band Test

The purpose of this test is to check the proper operation of the feedback chamber. Leaks, misalignments or wrong internal parts can cause the PID to not function properly. The output valve must stay open to allow output pressure to communicate with the feedback chamber.

For a Direct Acting Controller:

The integral (top) chamber must be at atmospheric pressure.

A. Remove plug from integral chamber and close reset valve (Figure 7). Tubing between derivative orifice and reset metering valve should stay connected.

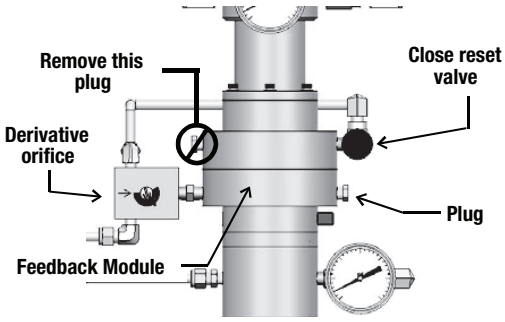

Figure 7 - Proportional Band Test

B. Change the sensing pressure until the output pressure is approximately 30% away from the power gas. For example, a VRP-PID- 40 needs the output adjusted to 30 psig, while a VRP-PID-80 and VRP-PID-125 need outputs of 60 psig and 90 psig respectively.

C. Consult the appropriate table from pages 6-8 depending on which model PID you have. Look at the left side of the table for the correct model number. Associate that model number with the corresponding control spring. Look at the chart under "Proportional Band" and choose the corresponding gain configuration of the PID. Look down for the point where the model and control spring row intersects with the proportional band/gain configuration column. This number is the amount of sensing pressure that must be input in order to see a 12 psig output change for a PID-40, 24 psig output change for a PID-80, or 30 psig change for a PID-125.

Example of Step C:

VRP-600-SB-PID-40, direct acting, high gain, yellow control spring

1. Turn to page 6 and look in the left hand column to find VRP-600-SB-PID-40.
2. The second column to the right shows the control spring range, and the third column reads "yellow control spring, 25- 1306" for the model VRP-600-SB-PID-40.
3. "With Small Ring" for a high gain pilot.
4. Where the rows and columns intersect is "23 psig (159 kPa)".
5. Take note of the initial sensing pressure and initial output pressure. Change the sensing pressure 23 psig (159 kPa) from the initial value. The output gauge should only have changed 12 psig (83 kPa) from its initial value.

D. Reinstall the top feedback chamber plug. Open the reset valve, and check for leaks around the feedback module.

For a Reverse Acting Controller:

The integral (bottom) chamber must have full output pressure.

A. Adjust the sensing pressure such that the output is at full power gas pressure. Wait a couple of minutes, and close the integral valve. This locks full power gas pressure in the integral chamber.

B. Follow steps B and C for a direct acting controller.

C. Re-open the metering valve.

3. Controller Test in PID Mode

Isolate controller from the actuator by positioning MCV in manual mode. The derivative orifice block should be set at 6. The power gas should be the maximum allowed for your controller (i.e. a PID-125 should have its power gas at 125 psig). The object of this test is to make sure the output pressure reaches zero or max in specified time.

This test is to be done once with the integral valve wide open, and once with the integral valve at #7. This test requires a timer.

To check that the output pressure drops to zero in specified time:

Start the test with sensing pressure 20% above setpoint (i.e., if the setpoint is 200 psig, raise it to 240 psig). The output pressure should reach its maximum (equal to power gas). Allow the PID chamber to become fully loaded by waiting 1-2 minutes. Lower the sensing pressure to 3% of the maximum spring range below the setpoint (i.e., if the setpoint is 200 psig, and the top of the control spring's range is 320 psig, set your pressure to 200 - .03x320 = 190.4 pisg, approximately). Start your timer. The output pressure should jump down a little and then continue to lower steadily. Stop your timer when the output pressure has gone down to approximately 10% of its full range (i.e., ˜12.5% for a PID-125). This should take 10-20 seconds if the integral valve is wide open, and 1-2 minutes if it is at #7.

To check that the output pressure rises to max in specified time:

Start the test with sensing pressure 20% below setpoint (i.e., if the setpoint is 200 psig lower it to 160 psig). The output pressure should fall to zero. Allow the PID chamber to empty by waiting 1-2 minutes. Raise the sensing pressure to 3% of the maximum spring range above the setpoint (i.e., if the setpoint is 200 psig and the top of the control spring's range is 32 psig, set your pressure to 200 + .03 x 320 = 209.6 psig, approximately) Start your timer. The output pressure should jump up a little and then continue to rise steadily. Stop your tier when the output pressure has risen to approximately 90% of its full range (i.e. ˜112.5% for a PID-125). This should take 10-20 seconds if the integral valve is wide open, and 1-2 minutes if it is at #7.

4. Dead Band Adjustment Drum

VRP-SB-PID controllers are factory adjusted with "zero" dead band. "Zero" dead band is defined such that when controller is at steady state there is a small growing bubble (10-30 seconds) from exhaust port. For some systems this dead band can be changed. On the adjusting drum between each whole number (large markings) are 3 small markings. Turning the adjusting drum 1 marking to the right (in direction of increasing numbers) decreases the dead band from "zero" to -1/4 (negative one-fourth) and introduces a small bleed gas. This action will increase controller sensitivity. Turning the adjusting drum 1 marking to the left (in direction of decreasing numbers) increases the dead band from "zero" to +1/4 (positive one-fourth). Another example is +1/2 or –1/2 dead band. This simply means that from the dead band "zero" setting the adjustment drum is moved 2 markings left (+1/2) or 2 markings right (-1/2). This important terminology is useful when setting different PID models using the example applications section (pages 15-20). After adjustment is completed, tighten the set screw to a torque of 1-2 in-lb to lock the deadband setting.

Changes in the dead band (sensitivity) adjustment affect setpoint adjustments. Each mark represents a 1/44 rotation of the adjusting screw. When dead band is decreased, (bleed gas introduced) setpoint is decreased. When dead band is increased, setpoint is increased. Using tables 3-5, refer to setpoint change per revolution. To find out the setpoint change divide the specified value by 44:

Example Calculation

VRP-600-SB-PID-40, yellow spring = 85 psig per revolution.

Each division on the drum represents 85/44 or 1.9 psig change in setpoint.

Derivative Orifice

Refer to a recommended derivative orifice and controller gain for your specific application. Derivative orifice can be adjusted by turning between numbers 0 and 6. "0" represents the fastest response of the controller and "6" the slowest. Three orifice sizes are available: small (not marked), medium (marked "M") and large (marked "L"). Small orifice represents the fastest response, large the slowest.

Integral (Reset) Valve

The reset metering valve can be adjusted between 4 and 15 on the outer barrel. Four represents the smallest reset value (the slowest correction rate).

Proportional Band Gain

Each model is available with three gains. The feedback module can be used without rings for the highest proportional band or with sets of rings. Middle gain controllers use large rings in the feedback chamber and high gain controllers use small rings. By referring to the spring range charts on pages 7 - 9, along with initial settings from table 8, the desired proportional band is selected. This selection determines which gain rings are needed if any. Controllers are normally shipped with high gain rings.

Applications

The Becker VRP-SB-PID configurations and their operative principles have been explained in detail. At this point we can summarize three advantages in the application of the VRP-SB-PID:

1) VRP-SB-PID is a three mode controller (proportional-integral-derivative) which complements the VRP-SB-CH. It is available in four configurations: a full direct or reverse acting PID, and a direct or reverse acting proportional plus derivative (PD) controller.

2) VRP-SB-PID is used for short systems (power plants, double stage cuts, etc.) where proportional feedbackfunction (P) is necessary to avoid cycling. For large systems VRP-SB-CH should be used.

3) A VRP-SB-CH controller can be converted to a VRP-SB-PID easily in the field simply by adding a feedback module. The next question is, "What are typical applications for the controller, and how do the different configurations come into play?"

To illustrate this very important question, 6 examples of typical applications will be given. In addition to the total schematic layout of the example application, critical initial orifice/metering valve adjustments are given to assist with installation. Before the application examples, however, a general view for selection of initial gain and size of the derivative orifice for specific valve applications can be seen in Table below.

Table 8 - Initial Recommendations for Control Valve

Application	Initial Gain Recommended	Derivative Orifice	Reset Metering Value
Globe valve w/spring and diaphragm (w/o positioner)	High (Rings w/small hole)	S=3	7
Globe valve w/positioner	Low (No Rings)	L=3	7
Ball valve w/spring and piston (w/o positioner) w/volume booster	High (Rings w/small hole)	S=3	7
Ball valve w/positioner	High (Rings w/small hole)	L=3	7

Power Plant Control Station with Start-up/Trimming Regulator

Refer to Example Applications #1 and #2 on next pages.

Primary Regulator (Pressure Control)

The Primary Regulator regulates incoming pressure to a pre-determined pressure required by the power plant. The Primary Pressure Control Regulator in Layout #1 utilizes a Globe Pattern Control Valve. Globe pattern control valves are used for power plants due to their flexible trim styles that allow for optimization of the valve to the application. Globe pattern valves use "characterizable" cage trim to achieve different flow characteristics. Additionally, they are available with multiple stages of noise trim to prevent the development of excessive noise when relative pressure drops reach high levels.

An alternative to the globe valve is the T-Ball type control valve. Refer to the footnotes in following pages for specific application guidelines. Whether globe or T-Ball style control, primary pressure control is not complete without one more element.

Layouts #1 and #2 show primary pressure control implemented with a Becker VRP-SB-PID Pneumatic Pressure Controller. VRP-SB-PID's are specifically suited to provide high performance pressure control when utilized in natural gas fired power plants. The VRP-SB-PID features zero steady state bleed and eliminates the need for a pneumatic positioner in most cases. Finally, the VRP-SB-PID is capable of functioning in a control valve system that requires pressure control with "flow control override."

Trim-run Regulator (Low Flow Regulator)

The Trim-run regulator is critical for both startup and normal operation of the power plant. The Trim-run regulator provides control of extremely low flow volumes that occur during startup of the power plant. As flow volume increases, the primary will begin to open and work in tandem with the Trim-run regulator. During normal operation, both the primary regulator and the Trim-run regulator will work together to achieve optimum control accuracy. The Trim-run regulator will accommodate high frequency/low amplitude fluctuations in the flow. On the other hand, the primary regulator will handle low frequency/high amplitude flow changes. The Trim-run regulator of choice for power plants is the 900TE RedQ as shown in Layout #1, or 2" Globe valve with VRP-PD as shown in Layout #2. The Trim-run regulator is coupled with a Becker Model FEP-CH Flexible Element Pilot for pressure control. Trim-run regulators are typically designed to utilize a primary and monitor in series.

Trimming Regulator Adjustment

The Trimming regulator is normally adjusted such that the regulator is open at 20-50%. This allows to keep the setpoint difference between main control valve and trimming regulator at the minimum. At the same time, 20-50% keeps the regulator far enough from the seats to eliminate premature wear.

Both style regulators (Flexible Element with FEP and Globe with VRP-PD) need to have proportional response only in order to achieve a droop in sensing pressure. This is accomplished by an inherent characteristic of the flexible element, and by a proportional only controller in the case of Globe valves.

Example How it Works:

1. Trimming regulator is adjusted at 500 psig (3447 kPa) lock-up.
2. Control valve is adjusted at 495 psig (3413 kPa) setpoint.
3. Power plant starts to take gas. During initial stage only small amount of gas is needed to satisfy igniters. As a larger volume of gas is required, the sensing pressure starts to drop and the regulator opens up. After a 5 psig (34 kPa) drop is reached the main control valve will come into operation. At this time theTrimming regulator is only opened up 20-30%. From now on the sensing pressure cannot drop anymore because the control valve will satisfy all volume demands. At the same time any pulsations or small changes from the plant will be handled by the start-up/trimming regulator.
4. In order to verify the opening of the flexible element regulator, a jacket gauge is provided. It is assumed, for simplicity, that jacket (Pj) pressure is linear in its relationship with differential pressure (P1 - P2). The following numerical example indicates how to calculate percent of open for the regulator:[1]

   P1 (Upstream) = 800 psig (5516 kPa)

   P2 (Downstream) = 500 psig (3447 kPa)

   Pj (Jacket Pressure) = 560 psig (3861 kPa)

   % open = Pj - P2 = 560 - 500 = 60 = 20%

   P1 - P2 = 800 - 500 = 300

   [1] Globe style Start–up/Trimmer Run is provided with standard visual linear indicator.

Example Application #1

Power Plant Station with Globe Style Control Valve

(4" & 6" Globe - 2" Start-up/Trimmer Run)
(8" & 10" Globe - 3" Start-up/Trimmer Run)

4", 6", 8" and 10" Globe Valves require assistance from a Low Flow/Trimmer Run.

A Low Flow/Trimmer Run is used for the start of power plants. It is also used in handling small variations in the load from power plants.

For this example, the typical Low Flow/Trimmer Run setup using RedQ™ Flexflo 900TEs is shown. Here the monitor regulator is a RedQ™ Flexflo, however, in the case of ΔP < 50 psig (345 kPa) the monitor regulator will be a Globe valve.

Recommended Applications:

A. Moderate pressure drops 300 - 500 psi

B. Pipeline Heater and Filter recommended.

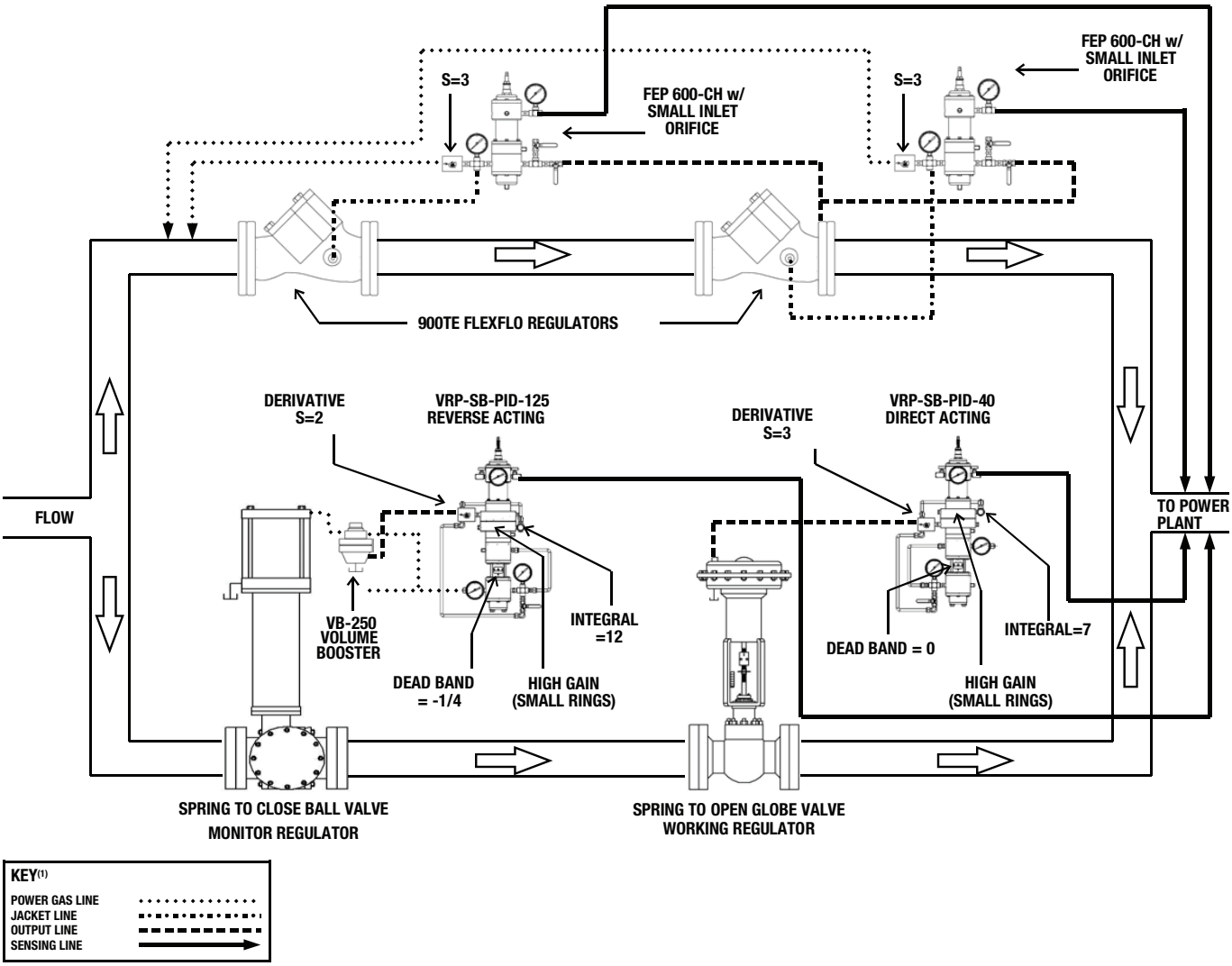

KEY[1]

- POWER GAS LINE
- JACKET LINE
- OUTPUT LINE
- SENSING LINE

[1]**ALL LINES ARE SEPARATE, INTERSECTING LINES DO NOT IMPLY CONNECTIONS**

Example Application #2

Power Plant Station with T-Ball Style Control Valve

(4", 6" and 8" Size)

This application is most commonly used when there is a minimum $\Delta P < 25$ psig (172 kPa) across the station. It is configured using a main run and Start-up/Trimmer Run with 2" Globe Valves. When minimum $\Delta P > 50$ psig Flexible Element Regulator are used as start-up run. A Low Flow/Trimmer Run is used for the start of power plants. It is also used in handling small variations in the load from power plants.

Recommended Applications:

A. Low pressure drop for T2 (1-300 psi)

B. High pressure drop for T4 (500-1000 psi)

C. Pipeline Heater and Filter are not required and Strainer is recommended for trim run.

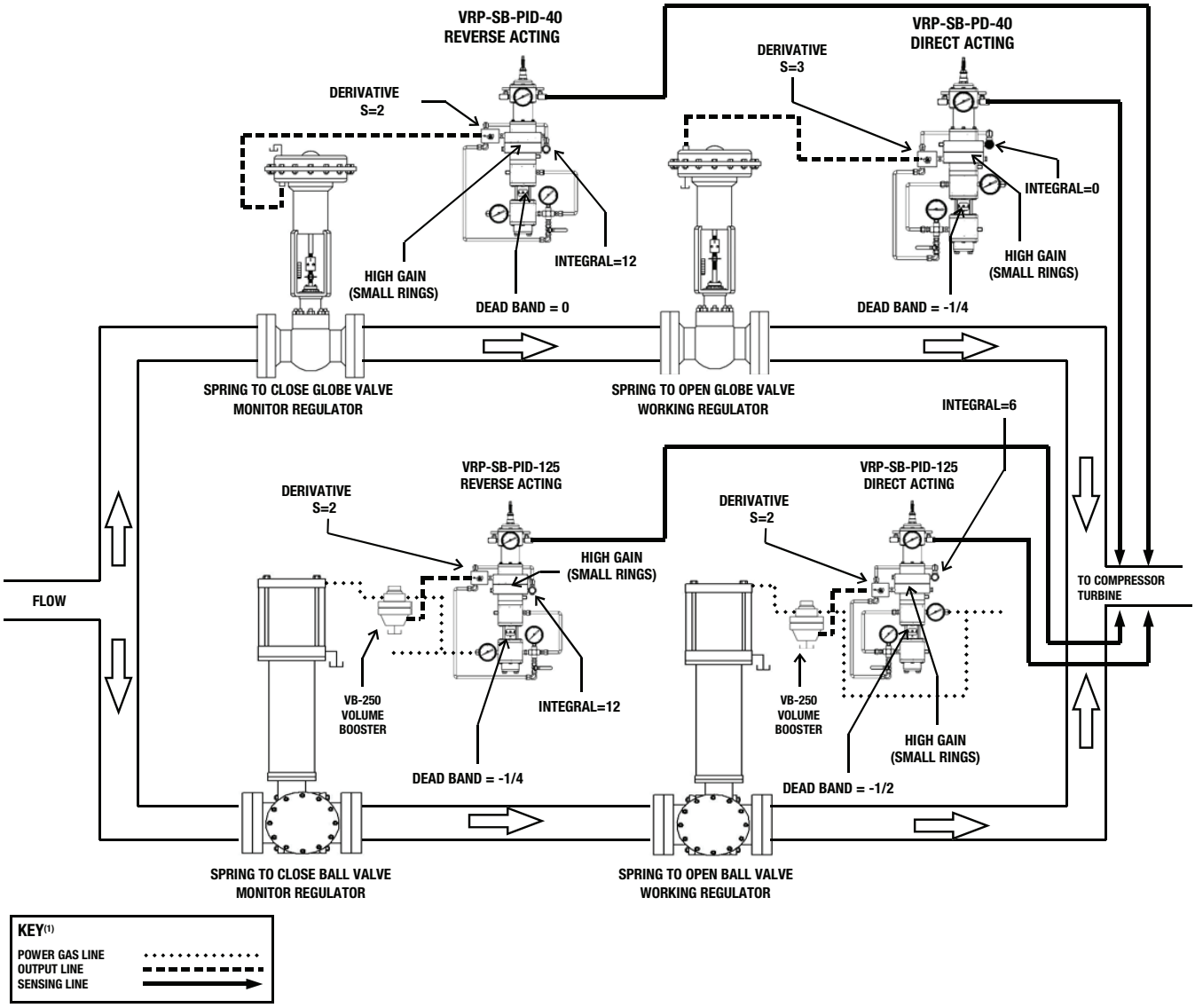

(1)ALL LINES ARE SEPARATE, INTERSECTING LINES DO NOT IMPLY CONNECTIONS

Example Application #3

Power Plant Station with Globe Style Control Valve and Globe Trim Valve

(4", 6", 8" and 10" Size)

Recommended Applications:

A. High differential pressure 500-1000 psig with tight noise requirements

B. Pipeline Heater and Filter recommended

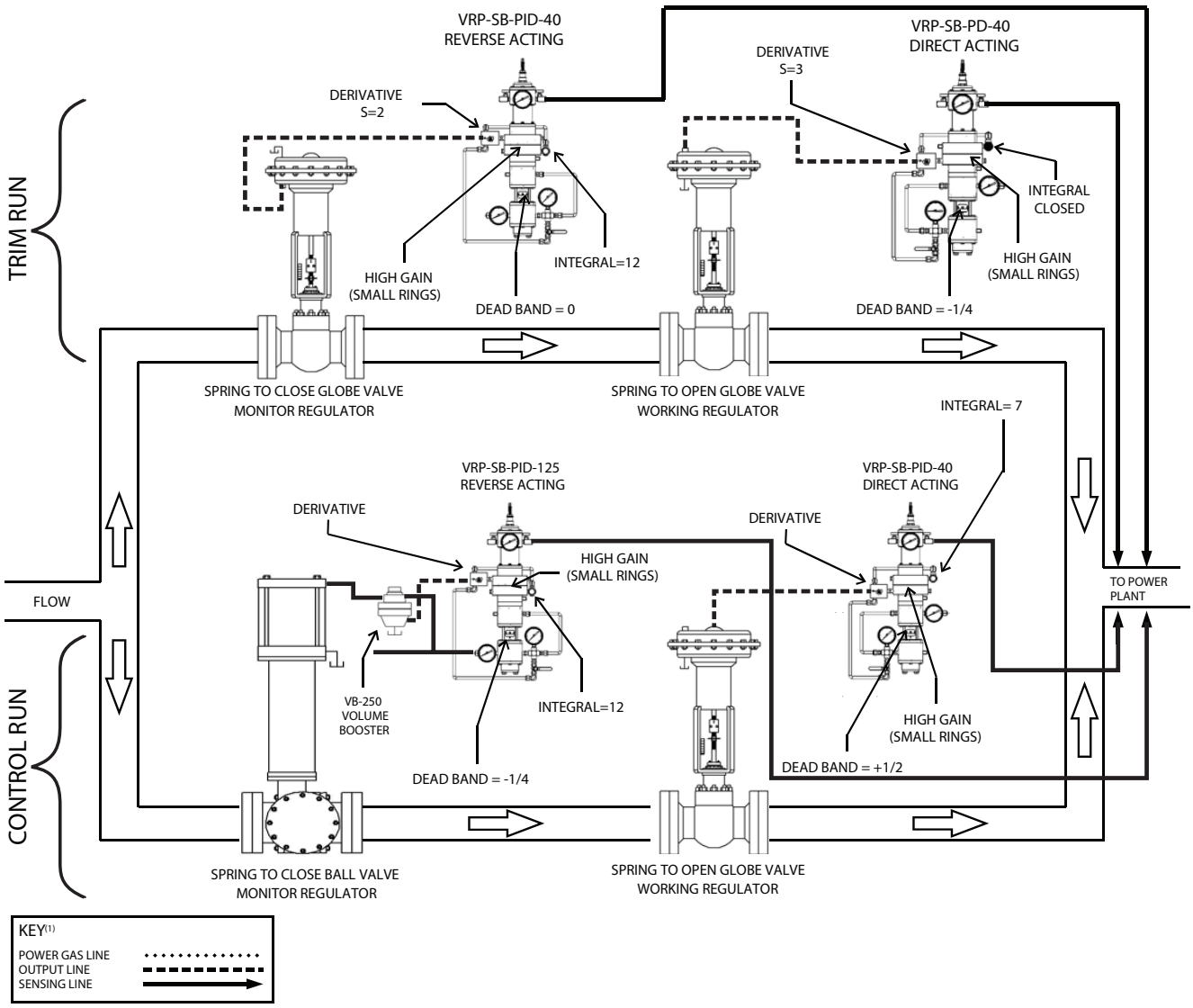

(1)ALL LINES ARE SEPARATE, INTERSECTING LINES DO NOT IMPLY CONNECTIONS

Example Application #4

Power Plant Station with Globe Style Control Valve (2" and 3" Size)

2" and 3" Globe Valves are used with VRP-PID controllers without a low flow start up run.

For this particular setup one controller is used as a monitor and another as the operating regulator. Monitor serves as a security device that protects power plant in case of a failure in the regulator.

Recommended Application:

Small Power Plants (200 MW & smaller)

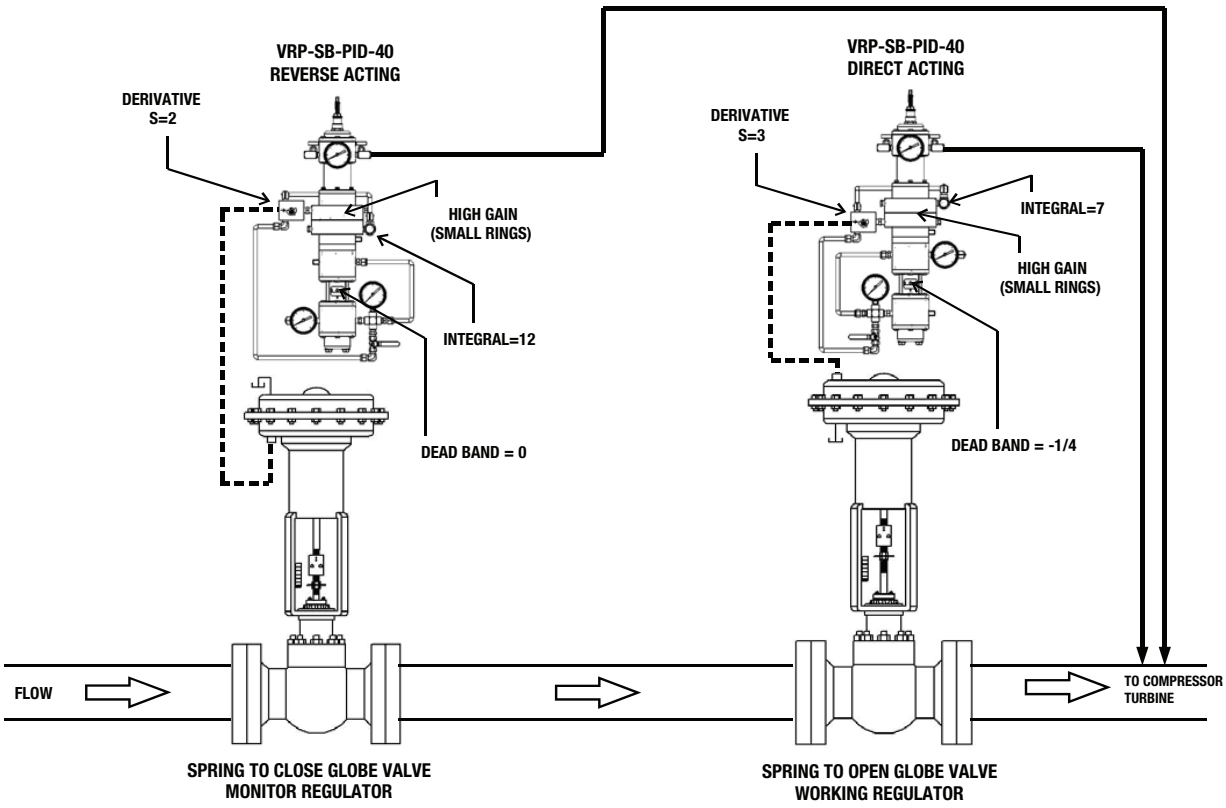

KEY[1]

OUTPUT PRESSURE

SENSING PRESSURE

[1]ALL LINES ARE SEPARATE, INTERSECTING LINES DO NOT IMPLY CONNECTIONS

Example Application #5

Fuel Regulator to Compressor Turbine
This application typically uses a VRP-SB-PID in conjunction with 2" or 3" Balance Cage Globe Valves.

The regulators are located within 50 feet or less from the compressors. In this example, main line pressure of 800-1000 psig (5516-6895 kPa) was to be reduced to fuel pressure of 250 psig (1724 kPa).

In this case a Double Stage Cut is preferred for better noise and vibration control, but it results in a highly unstable system. In order to compensate for this instability the first stage cut involves the conversion of the VRP-SB-PID to a VRP-SB-PD.

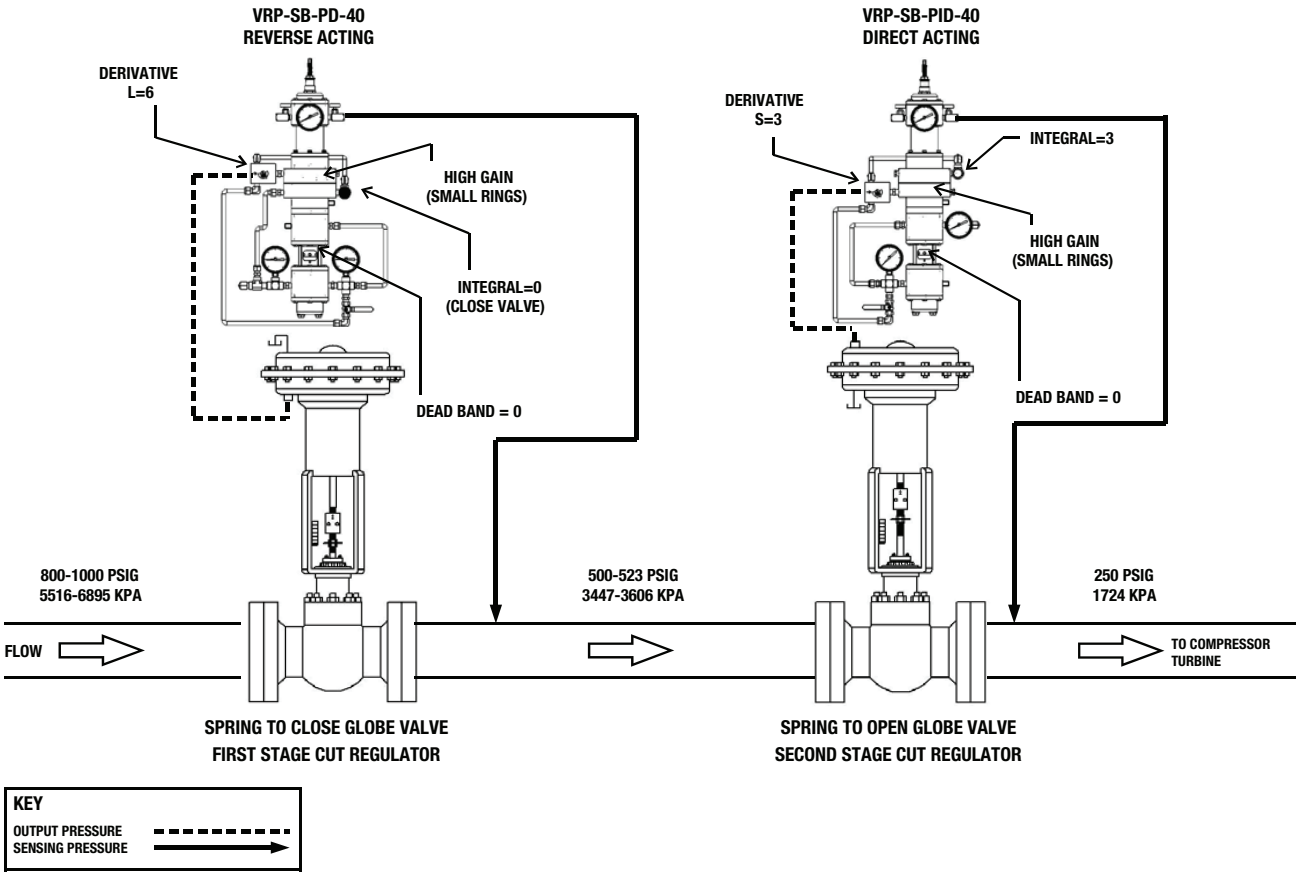

Example Application #6

Double Stage Cut with Working Monitor & Two Proportional Controllers Only

This application is used for large pressure cuts, over 1000 psig (6895 kPa), across the station.

The intermediate pressure floats as load fluctuates.

Downstream pressure can fluctuate within proportional band of the VRP-SB-PD controller. For a 3-15 psig (21-103 kPa) output the proportional band is 23 psig (159 kPa).

In case of failure of working regulator, the working monitor regulator will takeover control such acting as monitor.

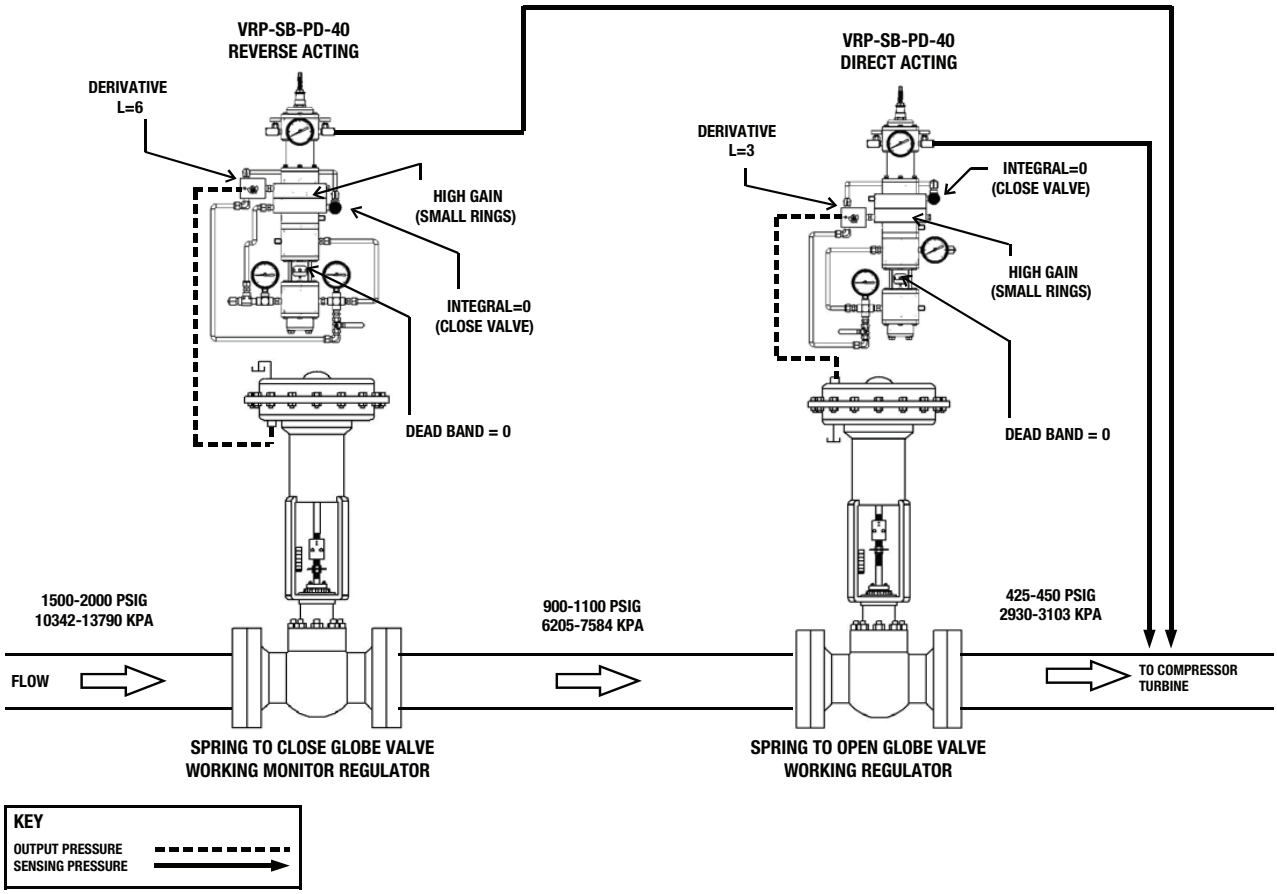

Annual Maintenance Checklist

The VRP-SB-PID pilot is built to exact specifications and high precision. However, like any pneumatic device it is necessary to periodically test and maintain the pilot to ensure optimum performance. For the VRP-SB-PID we recommend the following procedure once a year.

1. Internal Friction Test

Friction may occur to any one, or a combination of the following reasons:

A. Diaphragms are not centered properly

B. Control spring is not seated properly over the spring nut, or is defective

C. Dirt or ice build up inside pilot

Follow these steps to perform and internal friction test on the VRP-SB-PID:

A. Keep pilot at setpoint and close output block valve.

B. Adjust the pilot using INITIAL ADJUSTMENT procedure found on page 12.

C. Observe the output pressure. The output pressure must be stationary at setpoint. If output pressure changes continuously, note the direction of the change. Change may occur due to a leak in the sensing chamber or due to internal friction.

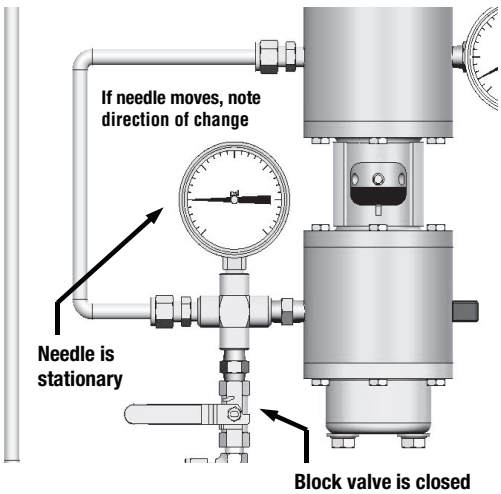

Figure 8 - Internal Friction Test Step C

D. Verify that no leak exists in the sensing chamber area. If output pressure still changes after all leaks are eliminated, the controller has internal friction present. In this situation, the controller must be taken apart and rebuilt.

2. Derivative Orifice Cleaning

A. Close the output block valve in order to prevent the controller from moving.

B. Close the valve on the measured variable line.

C. Shut of the supply pressure and bleed the system down at the pilot.

D. Take careful note of derivative orifice settings and all connections of tubes and fittings.

E. Remove derivative orifice. Take apart and clean inside thoroughly.

F. Remove old O-rings and reinstall new O-rings before reassembling derivative orifice.

G. Reinstall derivative orifice to original location. Be sure to connect all tubing and fittings to their original configurations. Adjust orifice to original setting before disassembly procedure.

3. Balance Valve / Seat Inspection

A. Close output block valve. Change the control pressure at least 5% above and below the setpoint using the "false signal" valves found at the top of the pilot. In each case soap test the exhaust port.

Direct Acting VRP-SB-PID Controller

B1. For the direct acting case the exhaust port is labeled P2. When the control pressure is above the setpoint, the supply balance valve (top block) is open and the exhaust balance valve (bottom block) is closed. Gas exhausting from port P2 indicates wear and contaminates in the exhaust balance valve assembly (located in bottom block).

C1. When the control pressure is below the setpoint the supply balance valve is closed and the exhaust balance valve is open. Gas exhausting from port P2 indicates wear or contaminants in the supply balance valve assembly.

Reverse Acting VRP-SB-PID Controller

B2. For the reverse acting case the exhaust port is labeled P4. When the control pressure is above the setpoint, the exhaust balanced valve (top block) is open and the supply balanced valve (bottom block) is closed. Gas exhausting from port P4 indicates wear and contaminates in the supply balanced valve assembly (located in bottom block).

C2. When the control pressure is below the setpoint the supply balanced valve is open and the exhaust balanced valve is closed. Gas exhausting from port P4 indicates wear or contaminants in the supply balanced valve assembly.

4. Soap Test / Gauge Inspection

A. Soap Test around all diaphragms, vents, and orifice assembly. Unless a leak is found it is not necessary to take the pilot apart. If any leak is found around the diaphragms, all rubber goods must be replaced. Take pilot apart, replace all rubber goods, then reassemble pilot.

B. Apply a "false signal" pressure in the sensing chamber using the "false signal" valves. Closely observe operation of gauges. If any gauge is defective then replace immediately.

The above test procedure precisely indicates the mechanical and pneumatic condition of the VRP-SB- PID pilot. Should any additional information or assistance be required, please contact GE.

Parts Lists and Part Numbers

VRP-600 Spring Chamber Assembly

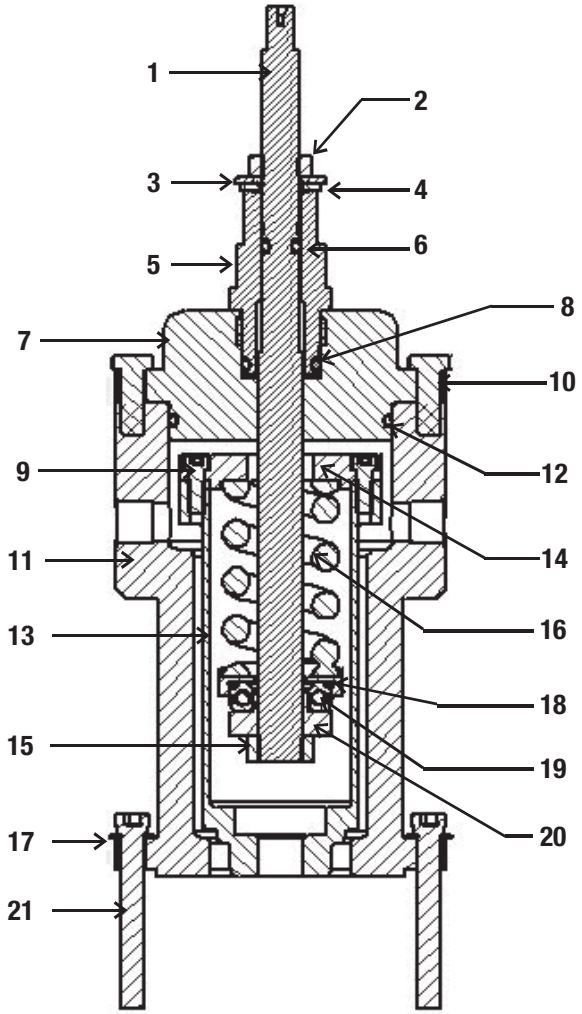

VRP-1000/1500 Spring Chamber Assembly

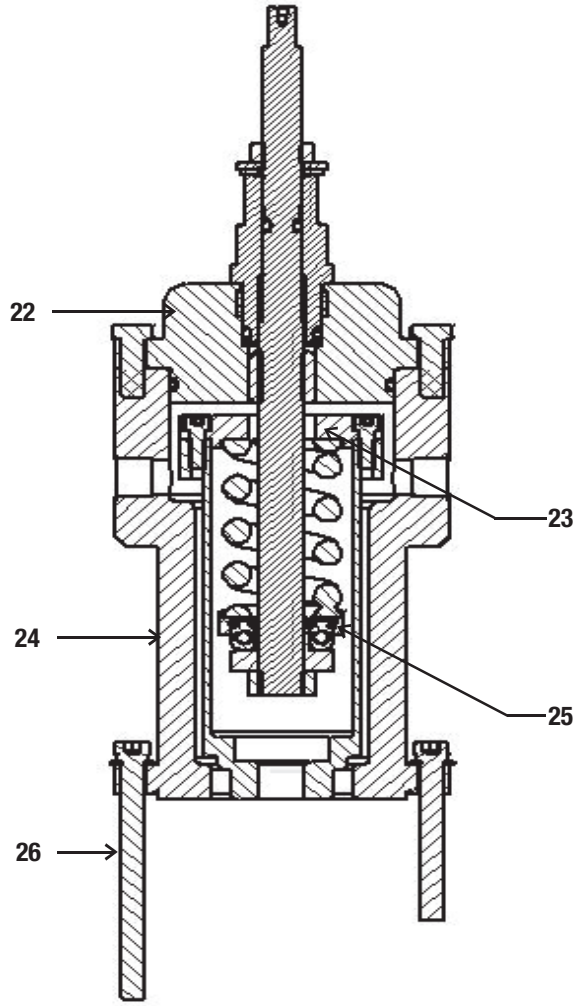

Key	Description	Part No.
1	Adjusting Screw	30-7022
2	7/16-20 Jam Nut	98-2500
3	7/16" Flat Washer SS	98-3181
4	7/16" Thread Seal	30-7017
5	Seal Neck	30-7009
6	O-Ring-108	95-2672
7	600 Cartridge Cap	30-7008
8	O-Ring-115	95-2670
9	8-32 x 1/2" SHCS 316 SS	98-2614
10	1/4-20 x 3/4" HHCS	98-3137
11	600 Spring Cartridge	30-7002
12	0-Ring-141	95-2671
13	Inner Tube	30-7003
14	600-1000 Inner Tube Cap	30-7007

Key	Description	Part No.
15	LH 1/2-20 Jam Nut	98-3213
16	Control Spring*	
17	1/4" FG Washer	98-3227
18	600-1000 Bearing Case	30-7006
19	Thrust Bearing	25-1062
20	Bearing Nut	30-7001
21	1/4-20 x 3/4" SHCS	98-3230
22	1000-1500 Cart. Cap	30-7040
23	1500 Tube Cap	30-7026
24	1000-1500 Chamber	30-7023
25	1500 Bearing Case	30-7027
26	1/4-20 x 3" SHCS	98-3231
27	8-32 x 1/2" SHCS Alloy (1500 only)	98-3269

Parts Lists and Part Numbers (Contd.)

VRP-600 Sensing Assembly

Maximum Allowable Operating Pressure (MAOP) = 600 psig

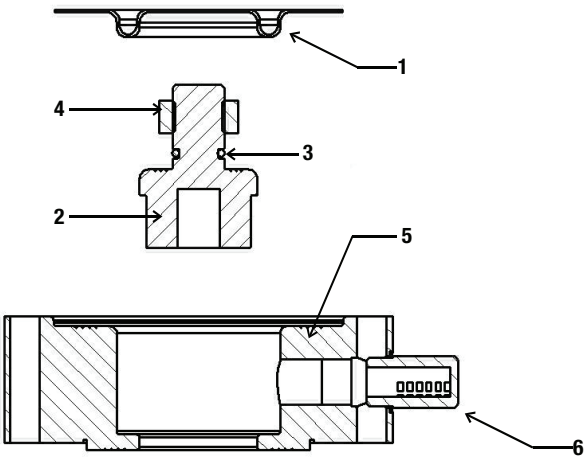

Key	Description	Part No.
1	Diaphragm	25-1027
2	Bottom Piston	25-1177
3	O-Ring-012	95-2615
4	1/2-20 SS Jam Nut	98-3056
5	600 Top Space	30-7050
6	1/4" NPT Vent Elbow	01-2572

VRP-1000/1500 Sensing Assembly

MAOP = 1500 psig

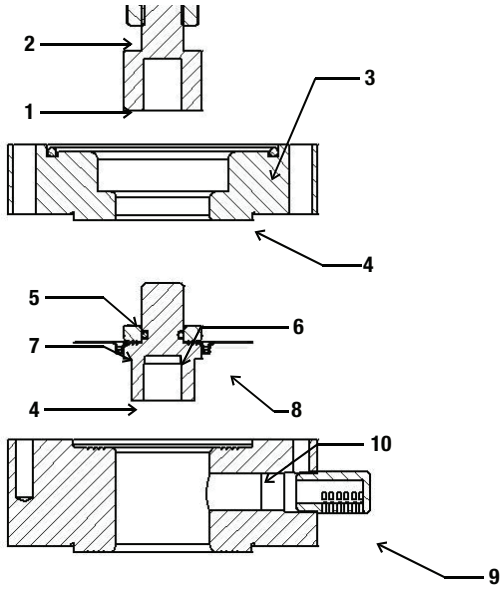

Key	Description	Part No.
1	Thread Extension	30-7015
2	1/2-20 SS Jam Nut	98-3056
3	O-Ring-145	95-2665
4	Adapter Block	30-7016
5	Small Piston w/Hole	30-7010
6	1/4" NPT Vent Elbow	01-2572
7	O-Ring-012	95-2615
8	Diaphragm w/Hole	30-7011
9	1/4" NPT Vent Elbow	01-2572
10	1000-1500 Top Spacer	30-7058

Parts Lists and Part Numbers (Contd.)

Feedback Chamber Assembly

Maximum Allowable Operating Pressure (MAOP) = 1500 psig

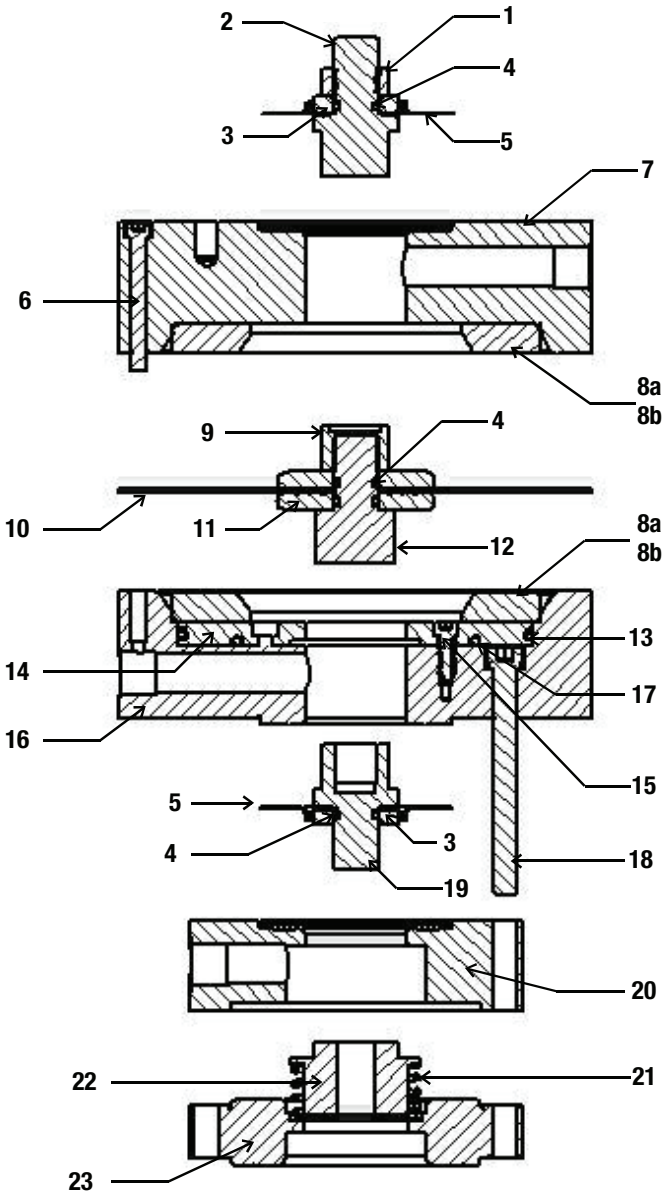

Key	Description	Part No.
1	1/2-20 SS Jam Nut	98-3056
2	Small Piston w/o Hole	30-7059
3	Small Washer	30-7014
4	O-Ring-012	95-2615
5	Diaphragm w/Hole	30-7011
6	8-32 x 1 1/2" SHCS	98-3145
7	Upper Feedback Chamber	30-7035
8a	High Gain Ring	30-7051
8b	Middle Gain Ring	30-7052
9	Aluminum Washer Nut	30-7049
10	Flat Diaphragm	30-7032
11	Diaphragm Washer	30-7053
12	Piston Spacer	30-7031
13	O-Ring-154	95-2674
14	Seal Plate	30-7036
15	8-32 x 1/2" SHCS	98-3232
16	Lower Feedback Chamber	30-7034
17	O-Ring-145	95-2665
18	1/4 x 2 1/2" SHCS	98-3232
19	Small w/Hole	30-7010
20	PID Spring Spacer	30-7046
21	Fixed Spring	30-7054
22	Spring Nut SS	30-7048
23	Spring Support Plate	30-7047

Parts Lists and Part Numbers (Contd.)

VRP-SB-CH Blank Assembly

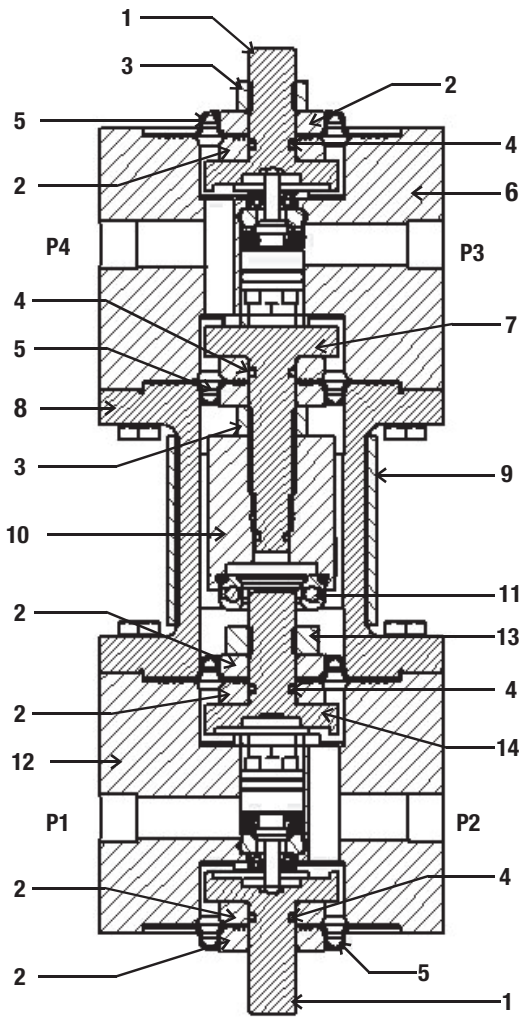

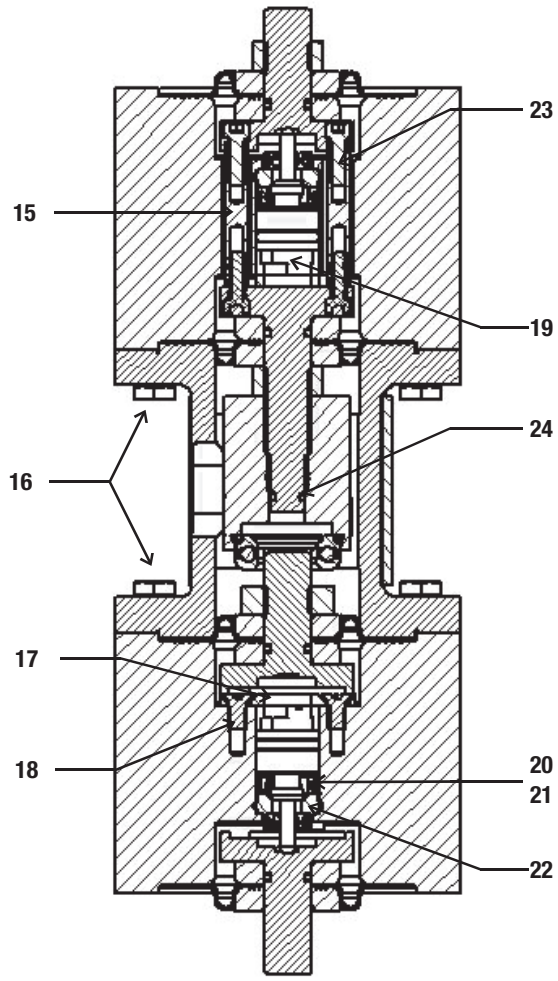

Key	Description	Part No.
1	Outside Piston	35-1506
2	Aluminum Washer	25-1016
3	1/2-20 SS Jam Nut	98-3056
4	O-Ring-012	95-2615
5	Diaphragm w/Conv.	25-1027
6	1/4" NPT Top Body	35-1557
7	Top Inside Piston	35-1528
8	Sensitivity Spacer	25-1015
9	Lexan Cover	25-1034
10	Adjusting Drum	35-1534
11	Thrust Bearing	25-1062
12	1/4" NPT Bottom Body	35-1558

Key	Description	Part No.
13	1/2-20 Aluminum Nut	25-1065
14	Bottom Inside Piston	35-1529
15	Pilot Post	35-1535
16	1/4-20 x 3/4" HHCS	98-3137
17	Seat Cover	35-1519
18	10-32 x 3/4" FHMS	98-2684
19	Balance Valve Assembly	35-1210
20	Strainer for B.V.	35-1559
21	Seat Spacer	35-1526
22	Seat Assembly	01-7082
23	8-32 x 1/2" SHCS	98-2614
24	O-Ring-010	95-2609

Parts Lists and Part Numbers (Contd.)

PID-40 Bottom Cap Assembly

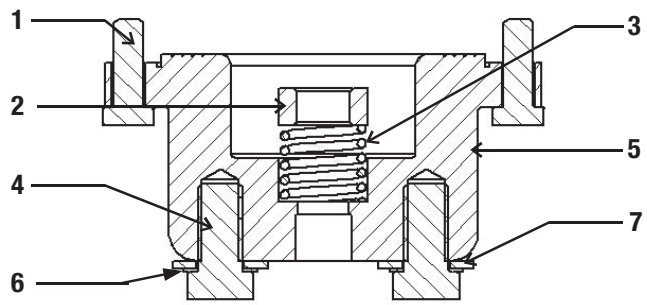

Key	Description	Part No.
1	1/4-20 x 3/4" HHCS	98-3137
2	1/2-20 SS Jam Nut	98-3056
3	Bottom Spring	25-1217
4	3/8-16 x 3/4" HHCS	98-2580
5	Pressure Cartridge	25-1022
6	3/8 SS Lock Washer	98-2782

PID-80 Bottom Cap Assembly

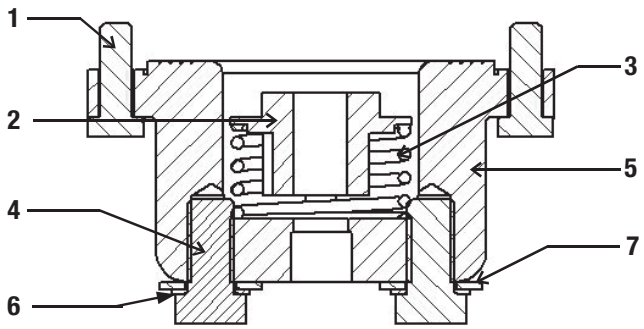

Key	Description	Part No.
1	1/4-20 x 3/4 HHCS	98-3137
2	SS Spring Nut	30-7048
3	Fixed Spring .135 Wire	30-7069
4	3/8-16 x 3/4" HHCS	98-2580
5	Bottom Spring Cartridge	30-7060
6	3/8 SS Lock Washer	98-2782
7	3/8 SS Flat Washer	98-2780

PID-125 Bottom Cap Assembly

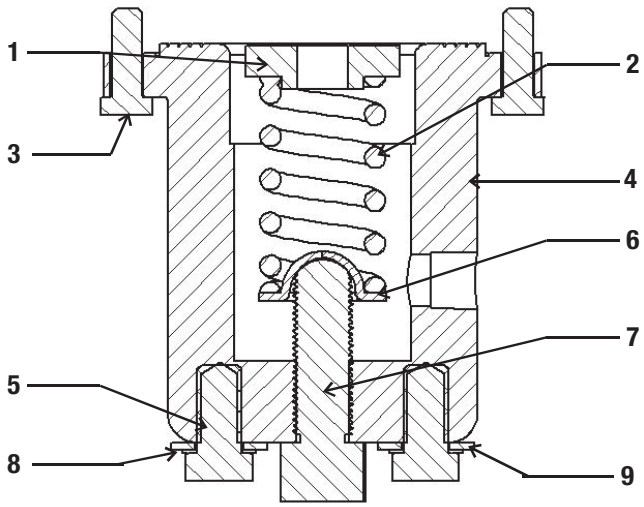

Key	Description	Part No.
1	Aluminum Spring Nut	25-1076
2	Blue Spring	25-1036
3	1/4-20 x 3/4 HHCS	98-3137
4	Spring Cartridge	25-1009
5	3/8-16 x 3/4' HHCS	98-2580
6	Spring Seat	11-2503
7	Spring Comp. Screw	30-7070
8	3/8 SS Lock Washer	98-2782
9	3/8 SS Flat Washer	98-2780

Accessories

SP Series Setpoint Change Pump

The SP pump provides a simple and accurate method of applying false signal pressure during initial adjustment of the VRP-SB-PID pilot. The pump can provide false signal pressure of 10% - 20% in excess of working pipeline pressure which eliminates the need for nitrogen bottles or electronic calibration devices.

Remote Setpoint Module

Provides remote adjustment of VRP-SB-PID setpoint via an electrical signal. Standard input signals are 24 VDC pulse and 120 VAC pulse. A 4- 20 mA input signal motor is optional. All motors provide 4-20 mA setpoint feedback.

AB Series Atmospheric Bleed Control

The AB maintains minimum pressure differential across the cylinder. AB control is required to provide the necessary output to operate the control valve under all design conditions.

VB-250 Volume Booster

The VB-250 Volume Booster provides additional volume capacity to the VRP-SB-PID for use with large volume control valve actuators. The VB Series Volume Boosters may also be utilized for applications that require additional speed of operation.

Troubleshooting Note on the VB-250

In steady state the exhaust port of the VB-250 Volume Booster should be bubble tight. If booster vents gas it can be for two reasons:

a. The diaphragm assembly is worn out or defective.

b. The main supply valve is worn out or defective.

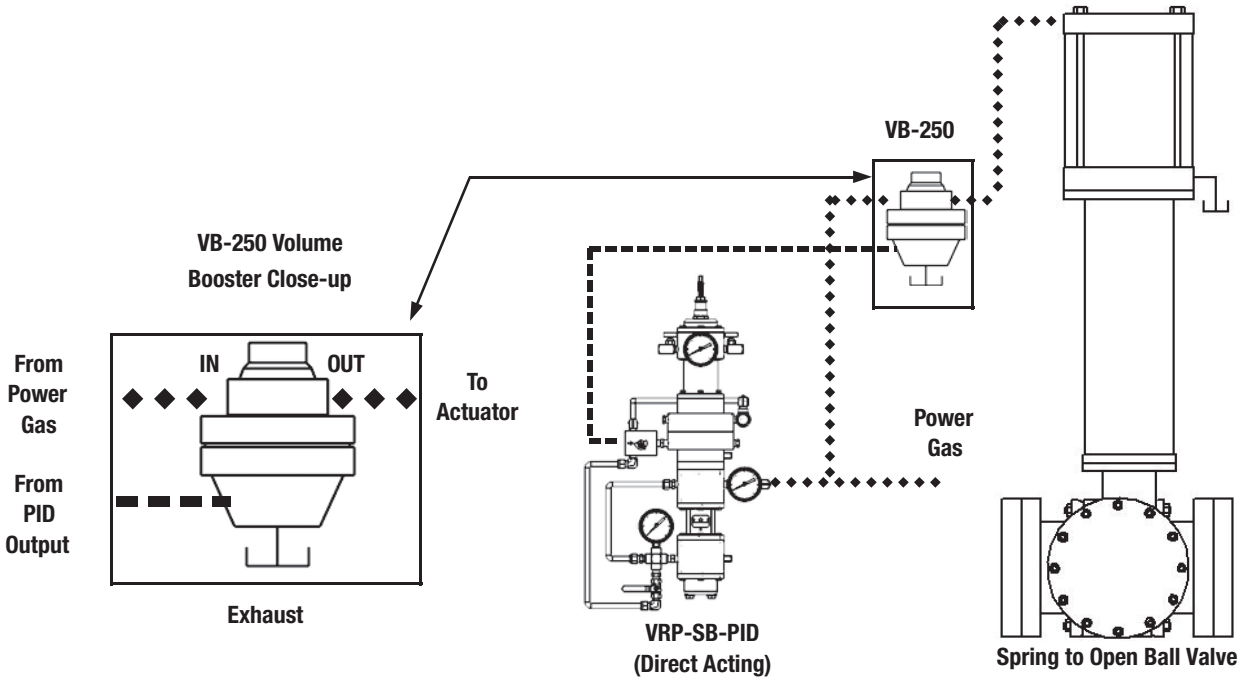

Assembly Manual

Assembly Note: During assembly, moisten o-rings, adjustment threads, thrust bearing and the recess in the spring seat with lightweight silicone grease. HOWEVER, care should be taken to avoid applying grease to diaphragm sealing surfaces, as this may compromise diaphragm sealing.

Top Body Assembly

(Figure 1)

Step 1: Using a 7/16" socket, press the Seat Assembly (A) into the Top Body (G).

Step 2: Insert the Spacer (B) into the Strainer (C) as shown in Figure 2. Place the Spacer/Strainer combination onto the Seat Assembly (A).

Step 3: Insert a Balance Valve Assembly (D).

Step 4: Secure the assembly in the Top Body (G) with a Seat Cover (E) and 2, 10-32 x 3/8" FHMS (F).

Bottom Body Assembly

(Figure 3)

Step 5: Using a 7/16" socket, press the Seat Assembly (A), into the Bottom Body (H).

Step 6: Insert the Spacer (B) into the Strainer (C) as shown in Figure 2. Place the Spacer/Strainer combination onto the Seat Assembly (A).

Step 7: Insert the Balance Valve Assembly (D).

Step 8: Secure the assembly in the Bottom Body (H) with a Seat Cover (E) and 2, 10-32 x 3/8" FHMS (F).

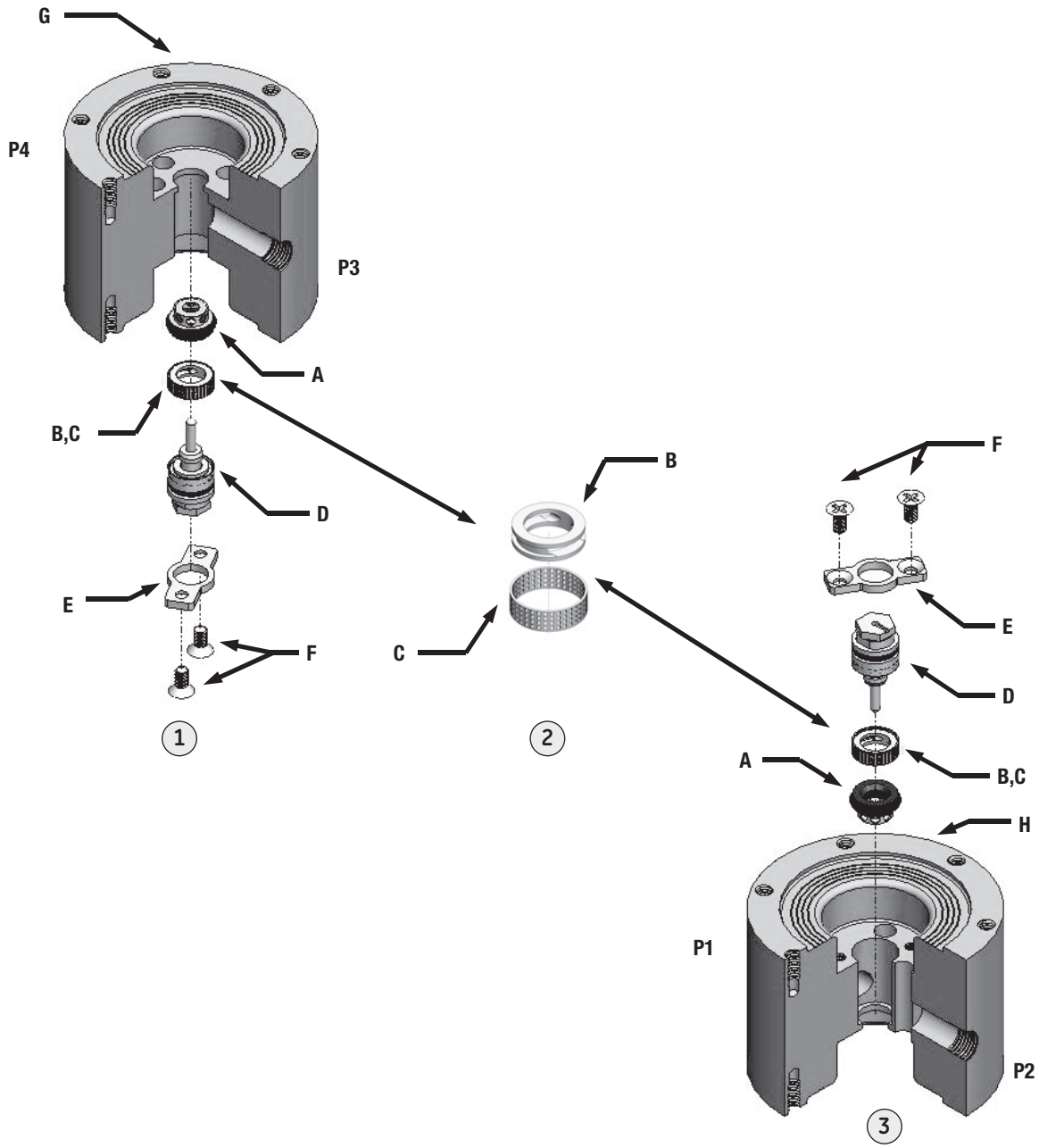

Figures 1, 2 and 3

Assembly Note: The balance valve assemblies are now installed. Perform a leak test of the valve bodies by following steps 9-11.

Step 9: Apply approximately 100 pisg air to the supply ports. For the **Top Body** (G) the port is marked "P3", and for **Bottom Body** (H) the port is marked "P1".

Step 10: Apply soap around the valve seat and the back end of the retainer, as shown in Figure 4 and Figure 5.

Step 11: If a leak is found, check the o-ring integrity, contamination between the balance valve (D), and the seat (A). Disassemble and repeat steps 1-11. If there are no leaks, move to step 12.

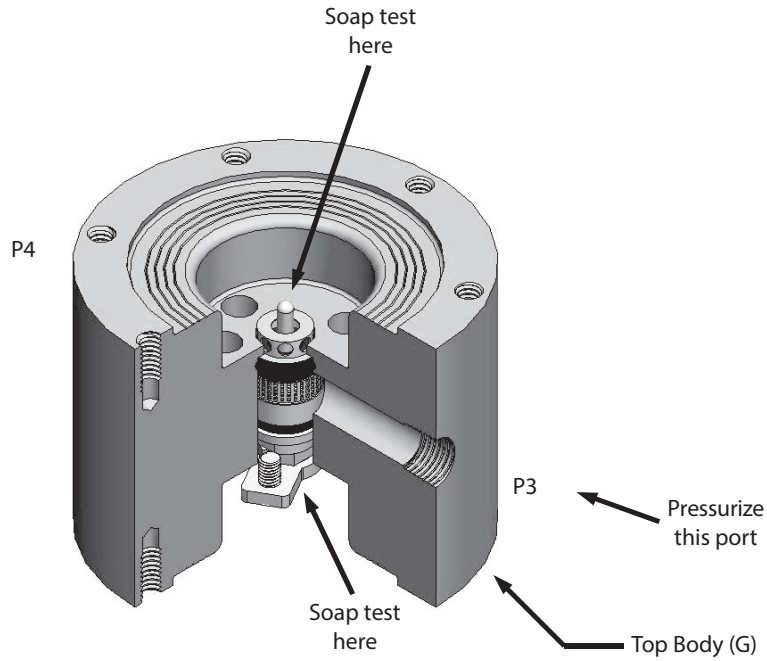

Figure 4

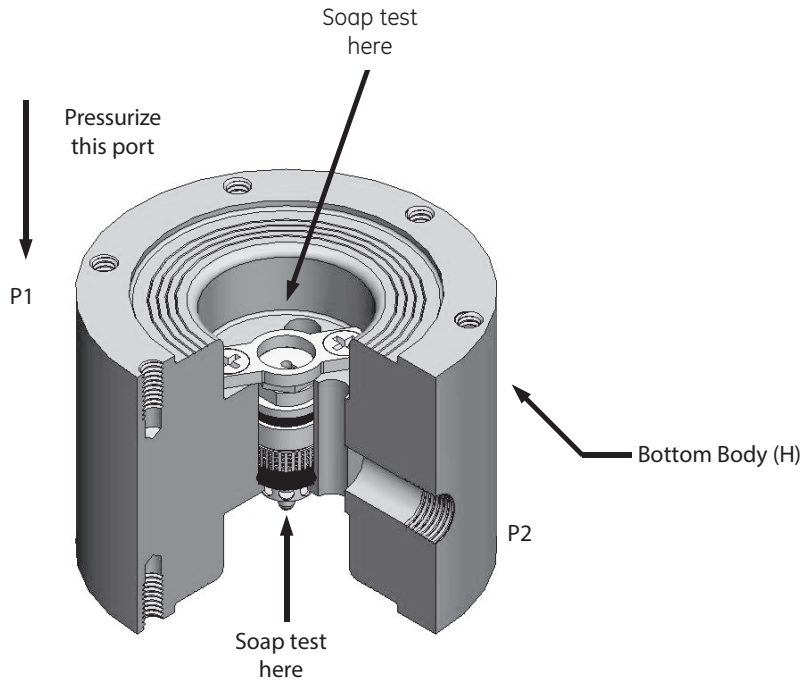

Figure 5

Top Body Piston Assembly

(Figure 6)

Step 12: Install –012 O-rings (K) into the grooves of the both the Outside Piston (J) and the Top Inside Piston (M). Slide a –010 O-ring (N) into the stem of the Top Inside Piston (M).

Step 13: Attach two Pilot Posts (L) to the Outside Piston (J) with 2, 8-32 x 1/2" SHCS (I).

Step 14: Slide the Pilot Post/Outside Piston combination through the Top Body (G), and attach it to the Top Inside Piston (M) with 2, 8-32 x 1/2" SHCS (I).

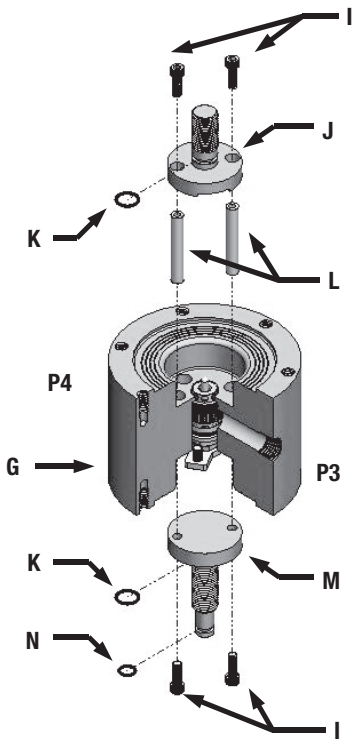

Figure 6

Bottom Body Piston Assembly

(Figure 7)

Step 15: Install –012 O-rings (K) into the grooves of the both the Outside Piston (J) and Bottom Inside Piston (O).

Step 16: Attach two Pilot Posts (L) to the Bottom Inside Piston (O) with 2, 8-32 x 1/2" SHCS (I).

Step 17: Slide the Pilot Post/Bottom Inside Piston combination through the Bottom Body (H), and attach it to the Outside Piston (J) with 2, 8-32 x 1/2" SHCS (I).

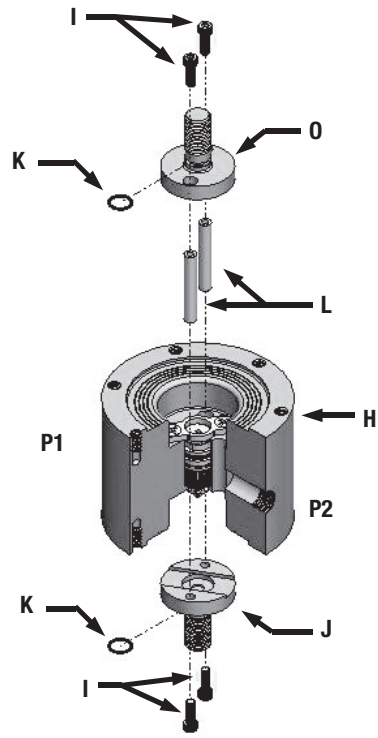

Figure 7

Top Body Diaphragm Assembly

(Figure 8)

Step 18: Slide one grooved Washer (Q) onto both the Outside Piston (J) and Top Inside Piston (M), with the grooves facing away from the Top Body (G).

Step 19: Install a Convoluted Diaphragm (R), onto each Washer (Q).

Step 20: Install another Washer (Q) onto each Piston (J, M) with grooves facing the Diaphragms (R).

Step 21: Finish by threading a 1/2-20 SS Hex Jam Nut (P) onto each Piston (J, M). Torque to 140-160 in.-lbs.

Bottom Body Diaphragm Assembly

(Figure 9)

Step 22: Slide one grooved Washer (Q) onto both the Outside Piston (J) and Bottom Inside Piston (O), with the grooves facing away from the Bottom Body (H).

Step 23: Install one Convoluted Diaphragm (R), oriented as shown in Figure 9, onto each Washer (Q).

Step 24: Install another Washer (Q) onto each Piston (J, M) with grooves facing the Diaphragms (R).

Step 25[1]**:** Thread the Aluminum Special Lat Nut (S) onto the Bottom Inside Piston (O).

Step 26[1]**:** This assembly can be finished in three ways:

A. For a VRP-SB-PID-40, thread another 1/2-20 SS Hex Jam Nut (P) onto the Outside Piston (J).

B. For a VRP-SB-PID-80, thread a SS Spring Nut (T) onto the Outside Piston (J).

C. For a VRP-SB-PID-125, thread an Aluminum Spring Nut (U) onto the Outside Piston (J).

[1] Torque Nuts in Steps 25 and 26 to 140-160 in.-lbs.

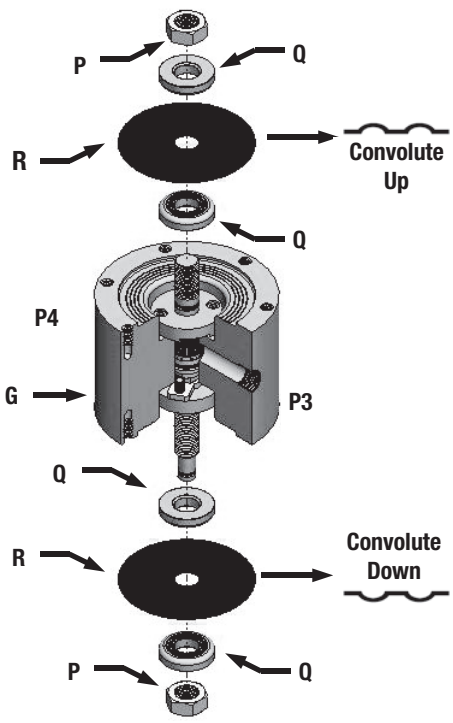

Figure 8

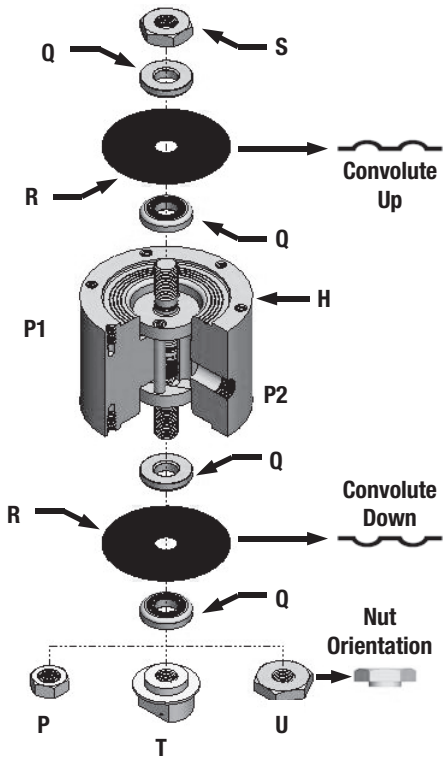

Figure 9

Sensitivity Drum Assembly

(Figures 10 & 11)

Step 27: Press fit the Thrust Bearing (W) into the Adjusting Drum (V). Make sure that the stamp-lettered surface of the Thrust Bearing (W) is fit with the bottom Drum (V) surface as shown in Figure 10.

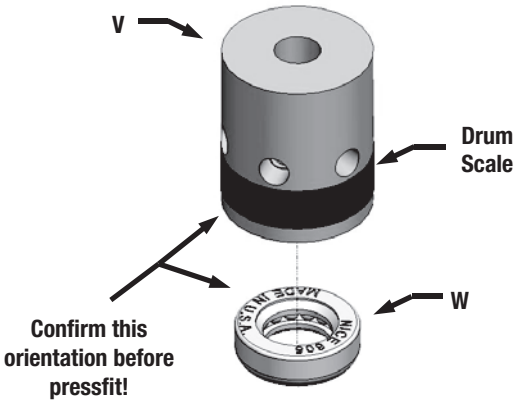

Figure 10

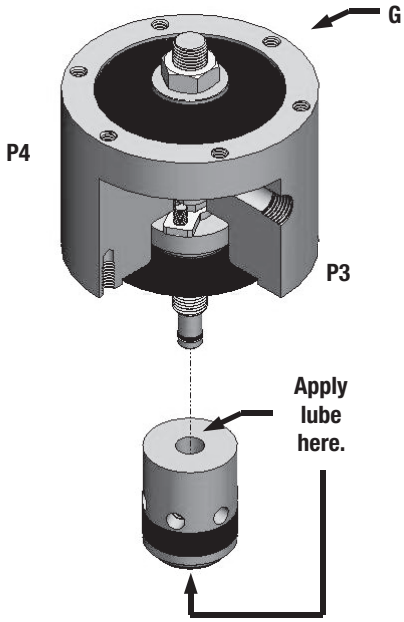

Figure 11

Centering the Diaphragms

(Figures 12-14)

Step 29: Center the completed diaphragm assemblies by following steps A through E:

A. Using the Pistons (J and O) for each Body (G and H), rotate the diaphragm assemblies Counter-Clockwise until they stop.

B. Mark the Diaphragms (R) and Bodies (G and H) with a line, as shown in Figure 12.

C. Next, rotate the diaphragm assemblies clockwise until they stop.

D. Mark the Bodies (G and H) with Extensions from lines already on the Diaphragms (R) as shown in Figure 13.

E. Finally, by drawing a line exactly between the two lines on the Bodies (G and H), the diaphragm assembly can be centered using the existing line that was drawn on the Diaphragm (R) as shown in Figure 14.

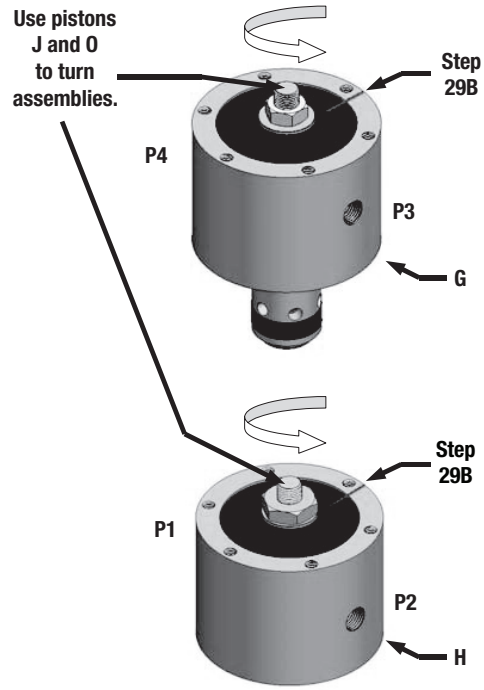

Figure 12

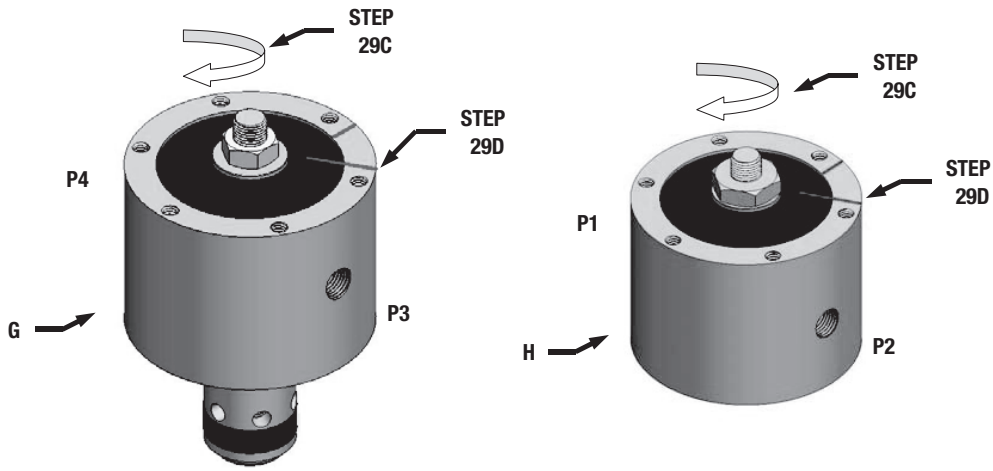

Figure 13

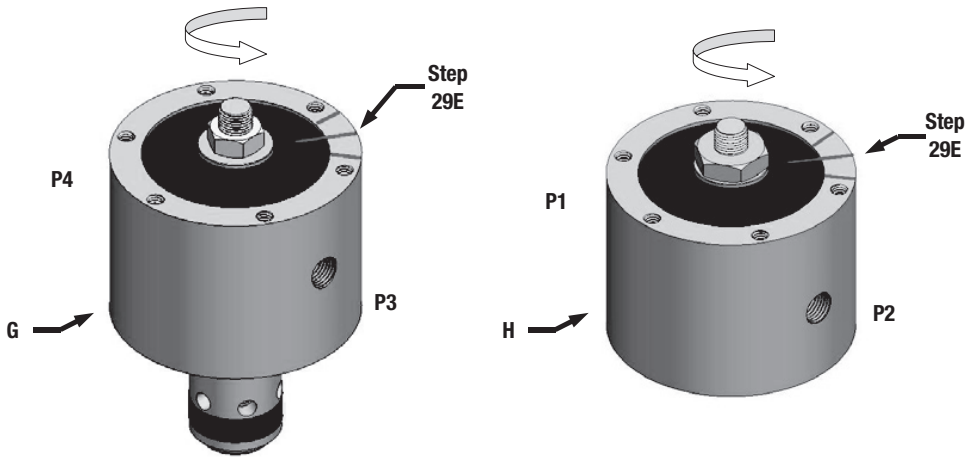

Figure 14

Sensitivity Spacer Assembly

(Figures 15 & 16)

Step 30: Slide the LEXAN Cover (Y) onto the Sensitivity Spacer (X).

Step 31: Insert 1/4-20 x 1/2 SS set screw (GGGG) into the Adjusting Drum (V), but do not tighten. This screw will be tightened after PID adjustment. Make sure the diaphragms stay centered between the two lines from Step 29E. Fasten the Top Body (G) assembly to the Sensitivity Spacer (X) with 6, 1/4-20 x 3/4" HHCS (Z). Torque to 100-110 in.-lbs.

Step 32: Secure the Bottom Body (H) assembly to the Sensitivity Spacer (X) with 6, 1/4-20 x 3/4" HHCS (Z). Torque to 100-110 in.-lbs.

Assembly Note:

(1) Looking closely at the Bodies (G and H), and the Sensitivity Spacer (X), notice the stamped numbers 2-7. Make sure these numbers are aligned as shown in Figure 16, before the assembly is fastened together.

Note:

(2) Do not use for VRP-PID-125.

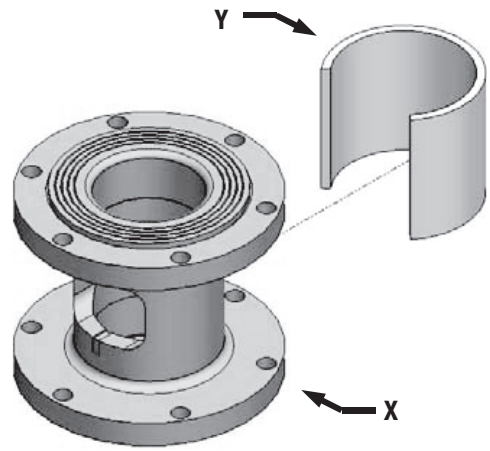

Figure 15

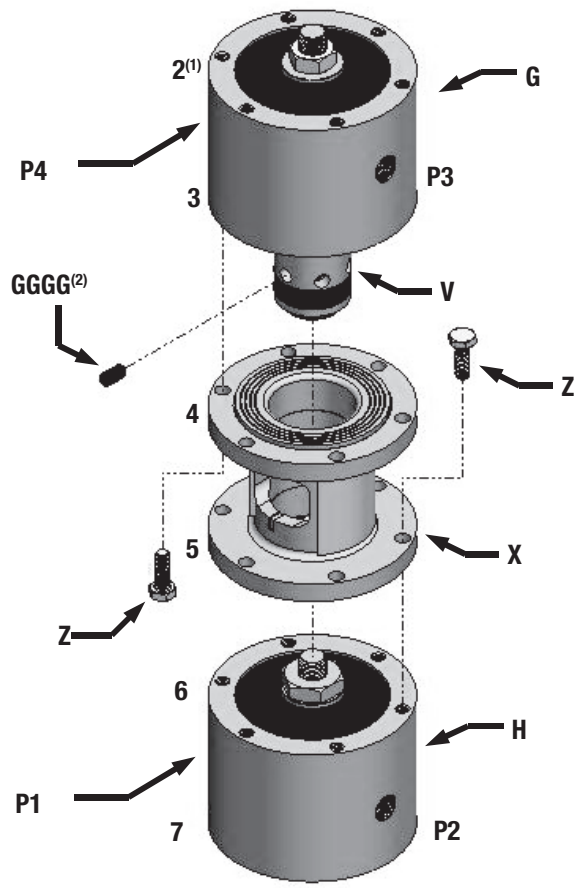

Figure 16

Assembly Note: Turn the entire assembly from Step 32 upside down before proceeding. Also, note the different sizes and wire diameters of the fixed Springs (BB, DD, and HH).

Bottom Cap Assembly

(Figures 17-19)

Step 33: This step can be done in one of 3 different ways depending on which model PID is assembled:

A. For a VRP-SB-PID-40 (Figure 17), place the Bottom Spring (BB) onto the Jam Nut (P). Secure the Bottom Spring (BB) by fastening the Pressure Cartridge (AA) to the Bottom Body (H) with 6, 1/4-20 x 3/4" HHCS (Z). Torque to 100-110 in.-lbs.

B. For a VRP-SB-PID-80 (Figure 18), place the Fixed Spring (DD) onto the Spring Nut (T). Secure the Fixed Spring (DD) by fastening the Bottom Spring Cartridge (CC) to the Bottom Body(H) with 6, 1/4-20 x 3/4" HHCS (Z). Torque to 100-110 in.-lbs.

C. For a VRP-SB-PID-125 (Figure 19):

   a. Place the Blue Spring (HH) onto the Spring Nut (U). Then place the Spring Seat (GG) onto the Blue Spring (HH).

   b. Secure the assembly by fastening the Spring Cartridge (FF) to the Bottom Body(H) with 6, 1/4-20 x 3/4" HHCS (Z). Torque to 100-110 in.-lbs.

   c. Thread the Spring Compression Screw (EE) into the Spring Cartridge (FF) all the way until it stops.

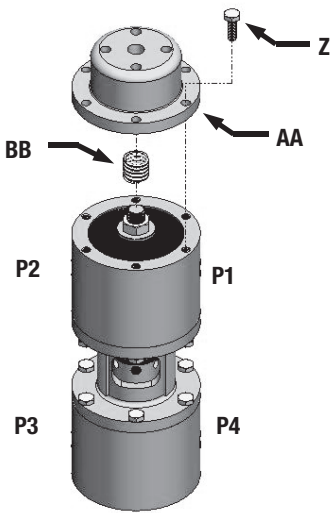

Figure 17

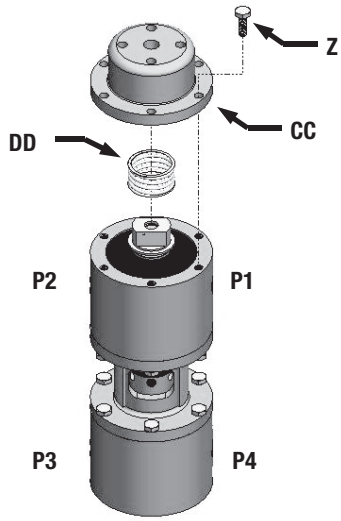

Figure 18

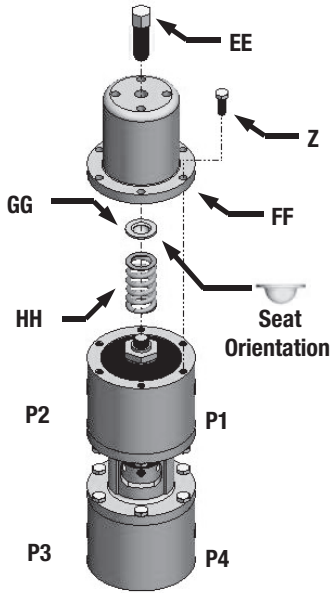

Figure 19

Bracket Mounting

(Figures 20-22)

Step 34: Take the VRP-SB-PID that you assembled after step 33 and turn "right side up" again. Mount the PID to the Bracket (CCCC) using 2, SS 3/8 Washers (DDDD), SS 3/8 Lockwashers (EEEE), and 3/8-16 x 3/4 HHCS (FFFF).

VRP-SB-PID-40

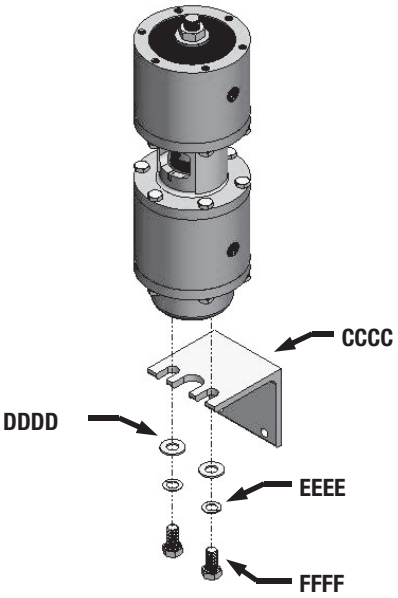

Figure 20

VRP-SB-PID-80

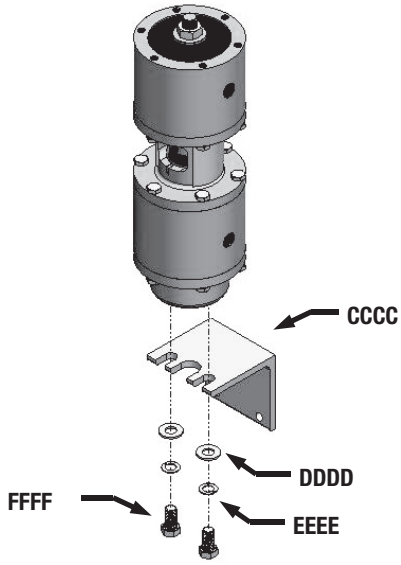

Figure 21

VRP-SB-PID-125

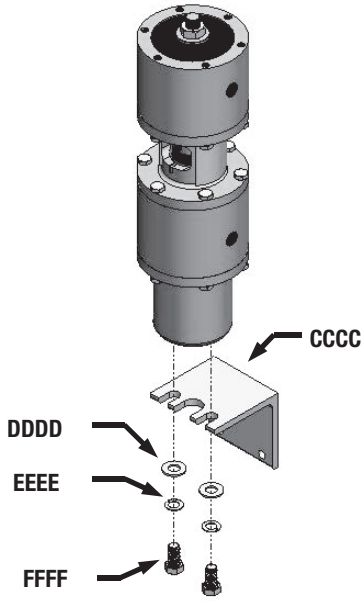

Figure 22

Diaphragm Assembly #1

(Figure 23)

Step 35: Slide a –012 O-Ring (K) onto the Small Piston (II). Place a Convoluted Diaphragm (JJ) onto the Small Piston (II) with the convolute facing away from the Small Piston (II).

Step 36: Install a Small Washer (KK) onto the Small Piston (II) with grooves facing the Convoluted Diaphragm (JJ). Tighten the assembly by threading a ½-20 SS Hex Jam Nut (P) onto the Small Piston (II) until it is flush with the Washer (KK). Take special note that the Piston (II) has no hole, while Piston (LL) does. Torque to 180-220 in.-lbs.

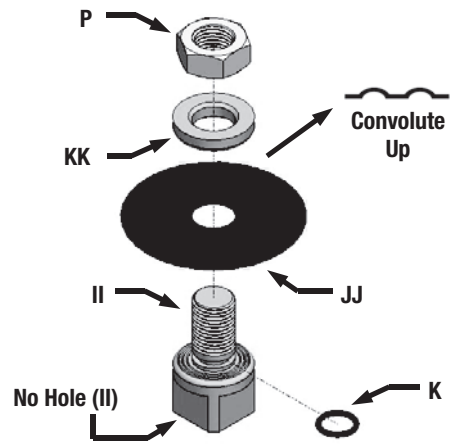

Figure 23

Diaphragm Assembly #2

(Figure 24)

Step 37: Slide a –012 O-Ring (K) onto the Small Piston (LL). Place a Convoluted Diaphragm (JJ) onto the Small Piston (LL) with convolute facing away from the Small Piston (LL).

Step 38: Install a Small Washer (KK) onto the Small Piston (LL) with grooves facing the Convoluted Diaphragm (JJ).

Step 39: Place the Diaphragm (JJ), Piston (LL), and Washer (KK) on top of the PID Spring Spacer (MM).

Step 40: Secure the assembly by threading a SS Spring Nut (T) onto the Small Piston (LL) until it is flush with the Small Washer (KK). Make sure the PID Spring Spacer (MM) is between the Diaphragm (JJ), and NUT (T)! Torque to 180-220 in.-lbs.

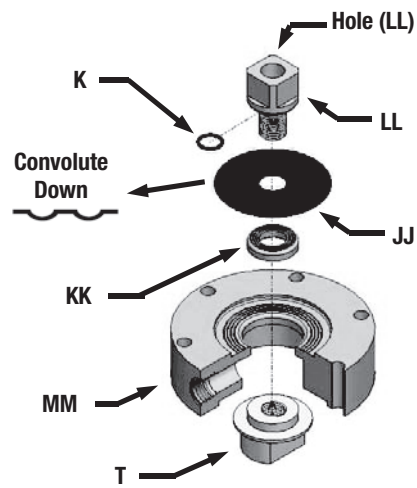

Figure 24

Diaphragm Assembly #3

(Figure 25)

Step 41: Slide two –012 O-Rings (K) onto the Piston Spacer (NN). Place one Diaphragm Washer (OO) onto the Piston Spacer (NN) with grooves facing up.

Step 42: Place the Flat Diaphragm (PP) on top of the Diaphragm Washer (OO).

Step 43: The assembly is completed by placing one more Diaphragm Washer (OO) over the Flat Diaphragm (PP), groove side down, and securing it all with a Aluminum Washer Nut (QQ). Make sure the Washer Nut (QQ) is secured tightly, with the undercut side facing the Diaphragm (PP). Torque to 100-110 in-lb.

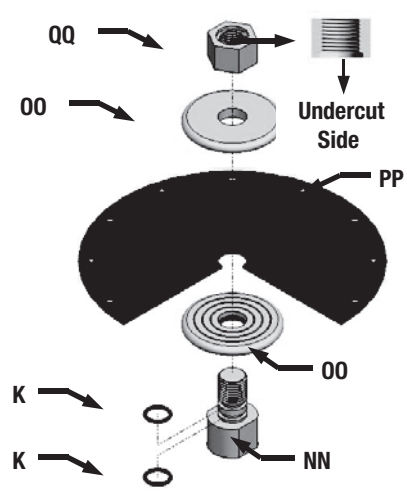

Figure 25

Spring Support Plate Assembly

(Figure 26)

Step 44: Place the Spring Support Plate (RR) on top of the Top Body (G). Take care to look at the alignment of the Spring Support Plate (RR).

Step 45: Place the Fixed Spring (SS) in the cavity of the Spring Support Plate (RR).

Step 46: Complete the assembly by placing Diaphragm Assembly #2 on top of the Fixed Spring (SS). Thread the Small Piston (LL) from Diaphragm Assembly #2 all the way into the Outside Piston (J) of the Top Body (G), thereby compressing the spring.

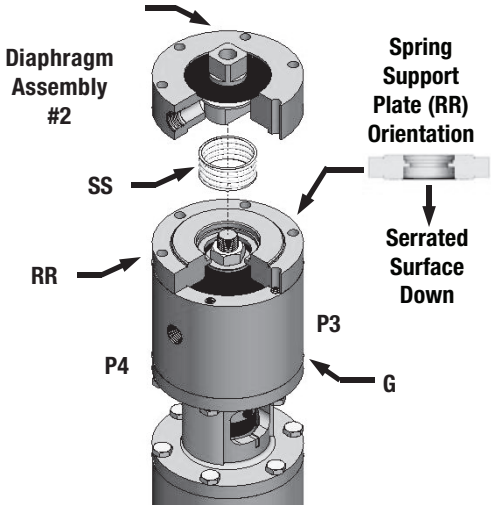

Figure 26

Feedback Chamber Assembly

(Figures 27-31)

Step 47: Bolt the Lower Feedback Chamber (TT) on top of the PID Spring Spacer (MM), as shown in Figure 27, using 6, 1/4-20 x 2 1/2" SHCS (UU).

Step 48: Slide a –154 O-Ring (VV) around the rim of the Seal Plate (WW), as shown in FIGURE 28. Place a –145 O-Ring (XX) into the bottom groove of the Seal Plate (WW).

Step 49: Bolt the Seal Plate (WW) to the Lower Feedback Chamber (TT) using 2, 8-32 x 1/2" SHCS (I).

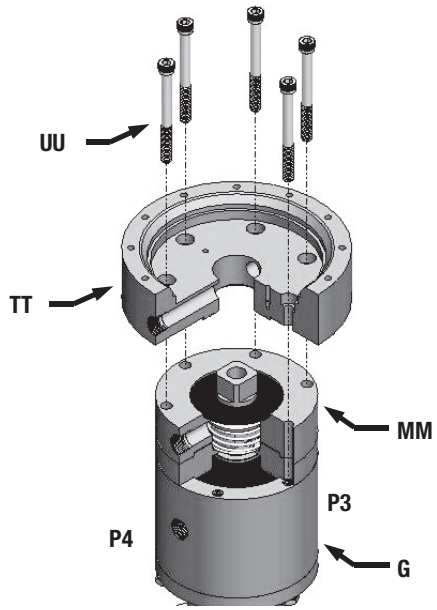

Figure 27

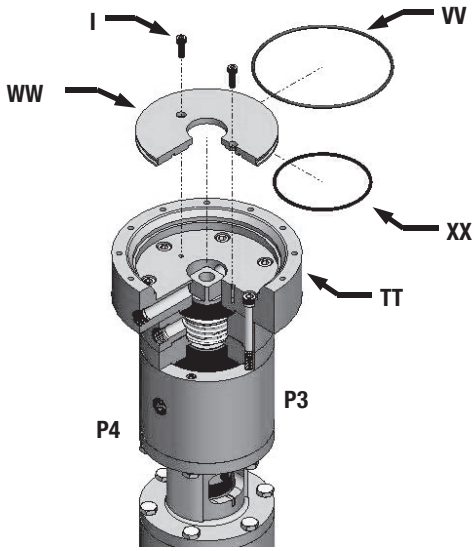

Figure 28

Step 50: This step can be done in one of 3 different ways depending on which model PID is assembled.

A. For a Low Gain Pilot (Figure 29), place Diaphragm Assembly #3 on top of the Lower Feedback Chamber (TT). Bolt Diaphragm Assembly #3 in between the Lower and Upper Feedback Chambers (TT and YY) with 12, 8-32 x 1 3/4" SHCS (ZZ). Move to Step 51.

B. For a Middle Gain Pilot (Figure 30), follow Step 50A, except, add the Middle Gain Rings (AAA) on both sides of Diaphragm Assembly #3. Take special note of the orientation of the chamfer on each of the Middle Gain Rings (AAA) shown in Figure 30. Move to Step 51.

C. For a High Gain Pilot (Figure 31), follow Step 50A, except, add the High Gain Rings (BBB) on both sides of Diaphragm Assembly #3. Take special note of the orientation of the chamfer on each of the High Gain Rings (BBB) shown in Figure 31. Move to Step 51.

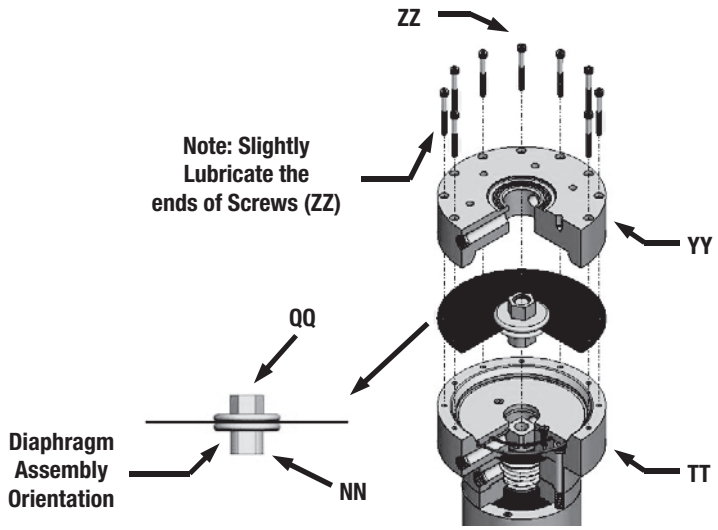

Figure 29

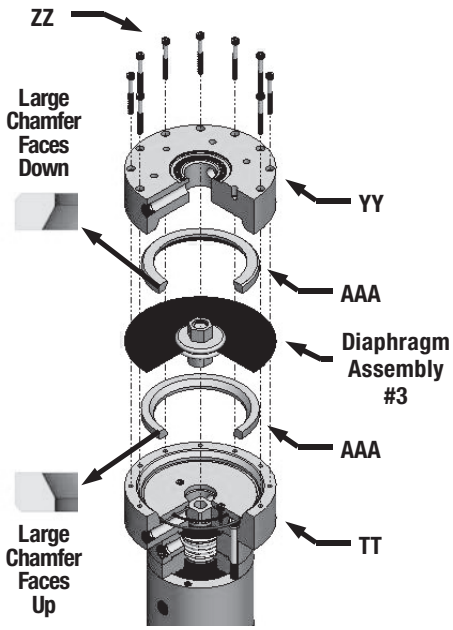

Figure 30

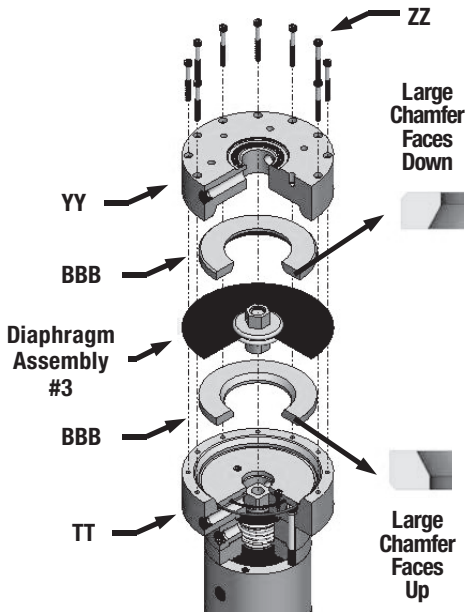

Figure 31

Spring Cartridge Assembly

(Figures 32-36)

Step 51: This step can be done in one of 2 different ways depending on which model PID is assembled.

A. For a VRP-600-SB-PID (Figure 32), slide a –012 O-Ring (K) onto the Bottom Piston (EEE). Orient the Diaphragm (R) as shown in Figure 32. Insert the Inner Tube (CCC) into the Spring Chamber (DDD). Clamp the assembly together by threading a 1/2-20 SS Jam Nut (P) onto the Bottom Piston (EEE) while holding it in a vise. Torque to 140-160 in.-lbs. Move to Step 52.

B. For a VRP-1000/1500-SB-PID (Figure 33-36), fasten the Thread Extension (FFF) to the Inner Tube (CCC) using a 1/2-20 SS Jam Nut (P). Tighten the assembly by holding the Thread Extension (FFF) in a vise while giving the Jam Nut (P) torque. Place the assembly into the Spring Chamber (FFF).

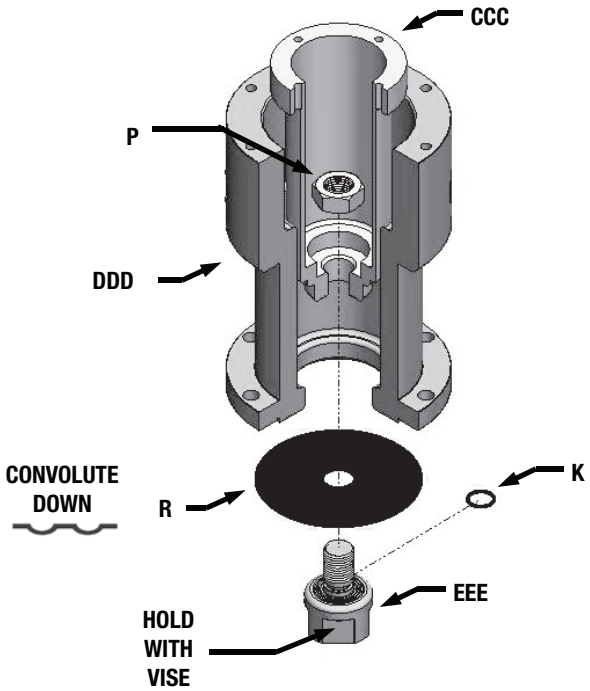

Figure 32

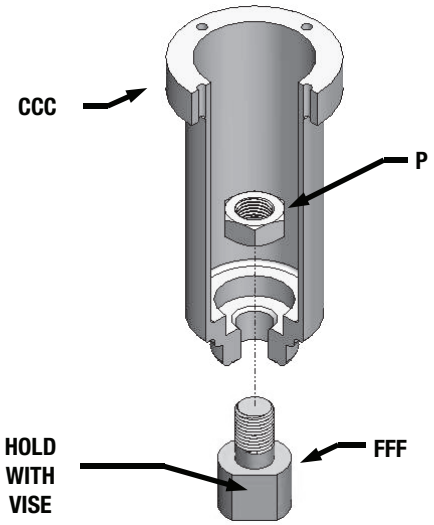

Figure 33

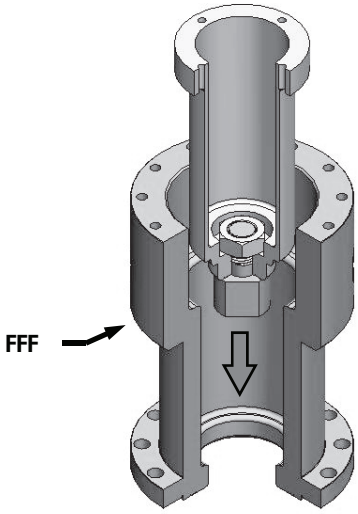

Figure 34

C. Slide a –012 O-Ring (K) onto the Small Piston (LL). Place a Convoluted Diaphragm (R) onto the Small Piston (LL) using the orientation shown in Figure 35. Slide a Small Washer (KK), onto the Small Piston (LL).

D. Insert a –145 O-Ring (GGG) into the Bottom Spacer (HHH) as shown in Figure 36. Thread the diaphragm assembly created in Step 50C into the Thread Extension (FFF). The assembly must be tightened further by holding the diaphragm assembly in a vise while applying torque to the NUT (P). Torque to 180-220 in.-lbs. Move to Step 52.

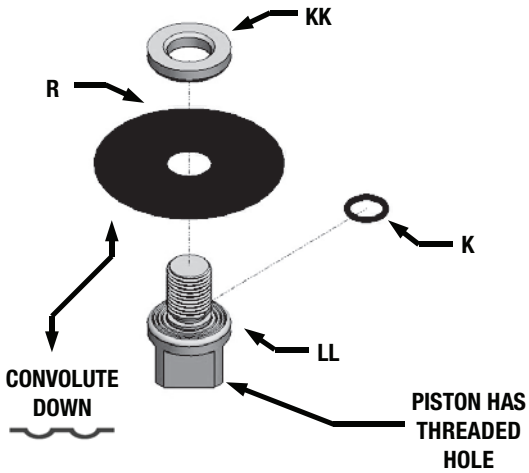

Figure 35

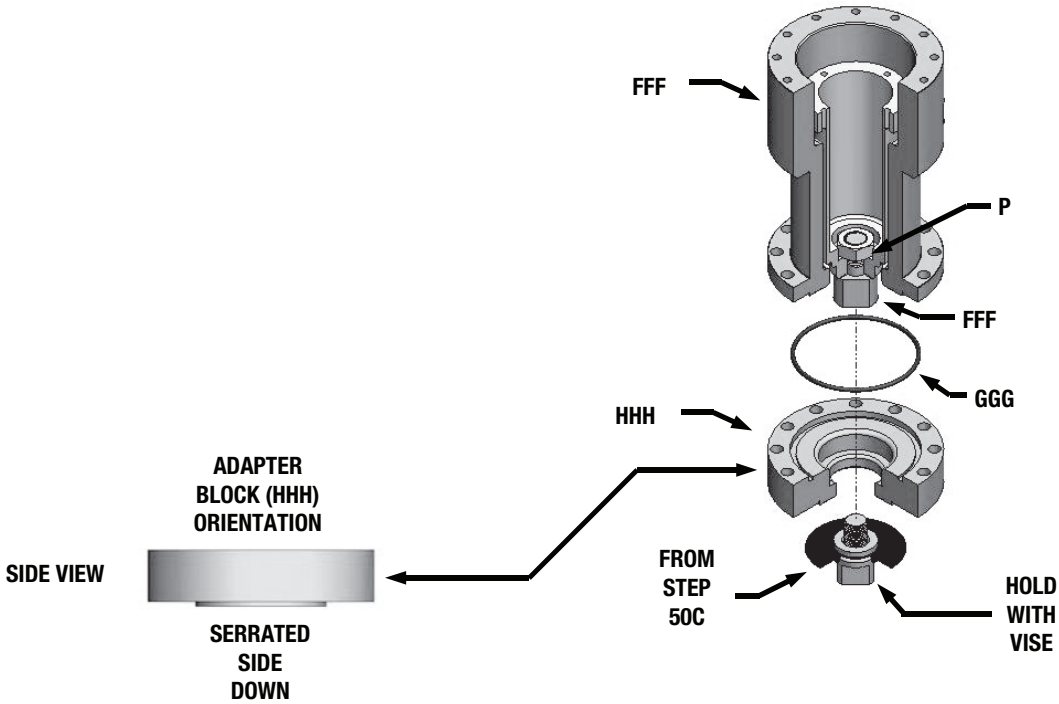

Figure 36

Adjusting Screw Assembly

(Figures 37-40)

Step 52: Press fit the Thrust Bearing (W) into the Bearing Case (III).

Step 53: Slide a –108 O-Ring (KKK) onto the Adjusting Screw (JJJ) as shown in Figure 38. Slide the assembly from Step 52 onto the Adjusting Screw (JJJ).

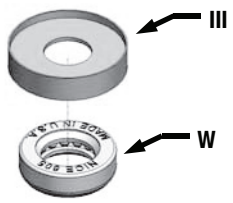

Figure 37

Step 54: Thread the Aluminum Bearing Nut (LLL) onto the Screw (JJJ) from the bottom. Leave some room below the Bearing Nut (LLL), and thread a 1/2-20 SS Left-Hand Jam Nut (MMM) onto the Screw (JJJ). The Jam Nut (MMM) and Bearing Nut (LLL) should be tightened against each other as shown in Figure 39.

Step 55: Place the Tube Cap for VRP-600/1000_SB-PID or Tube Cap SS for VRP-1500-SB-PID (OOO) and Control Spring (NNN) onto the Adjusting Screw (JJJ). Check the concentricity of the Spring (NNN), by spinning the assembly. Make sure that the Spring (NNN) touches no parts of the Screw (JJJ) when spinning. If the Spring (NNN) does touch any part of the Screw (JJJ), then replace the Spring (NNN) and repeat the test. If the Spring (NNN) is satisfactory then move to Step 56.

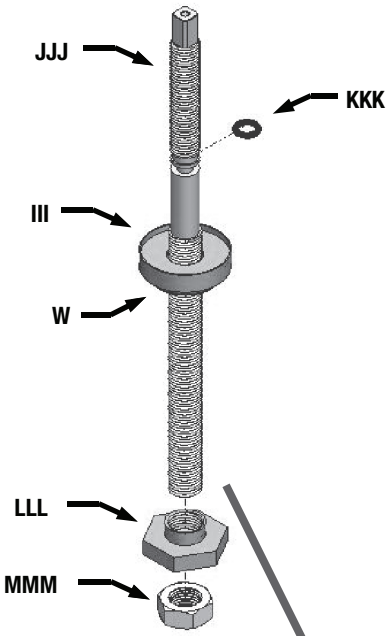

Figure 38

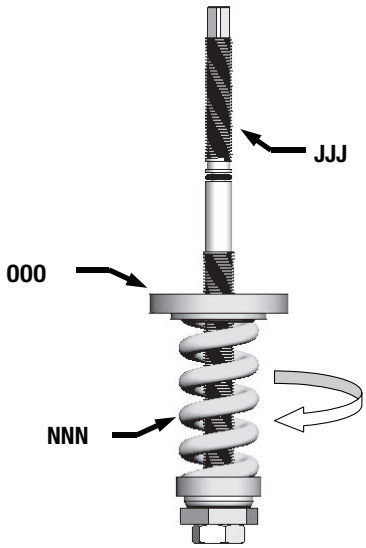

Figure 40

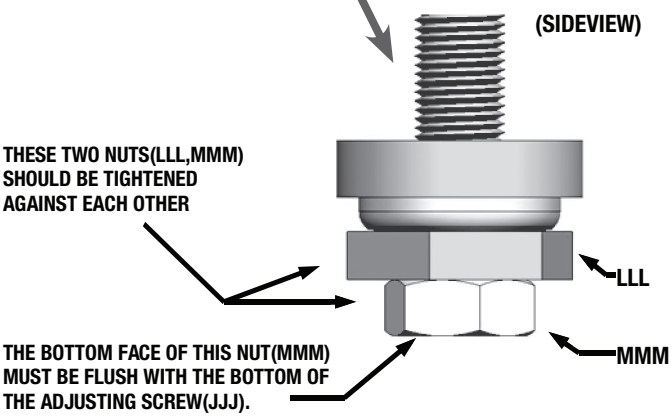

Figure 39

Spring Chamber Assembly

(Figures 41-44)

Step 56: This step is dependent on the model of PID being assembled:

A. For a VRP-600-SB-PID, place the Top Spacer (PPP) below the assembly from Step 51A. Thread the Small Piston (II) from Diaphragm Assembly #1 into the Bottom Piston (EEE) of the assembly from Step 51A. Thread the Small Piston (II) all the way by hand until it stops. **DO NOT** use a wrench.

B. Place the assembly from Step 56A onto the Top Feedback Chamber (TT). Secure the assembly with 6 Fiberglass Washers (RRR), and 6 1/4-20 x 2 SHCS (QQQ). Move to Step 57.

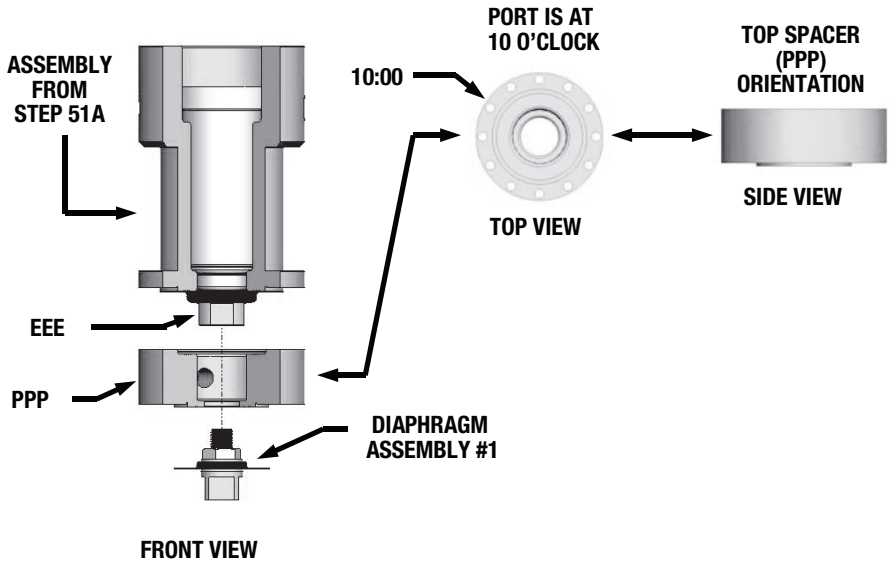

Figure 41

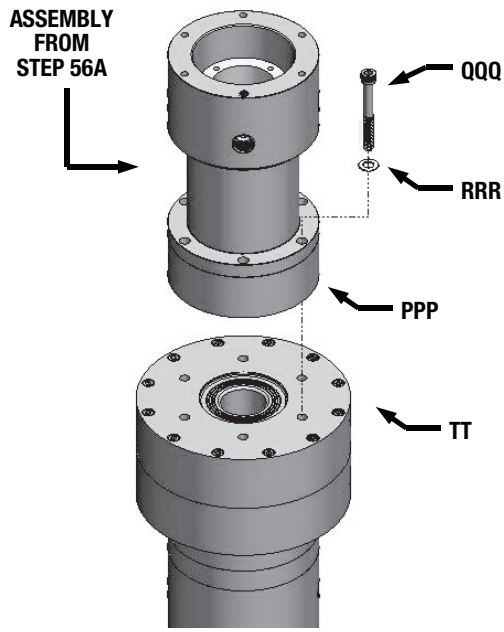

Figure 42

C. For a VRP-1000/1500-SB-PID, place the Bottom Spacer (SSS) below the Adapter Block (HHH). Thread the Small Piston (II) from Diaphragm Assembly #1 into the Small Piston (LL) from Step 51D. Thread the Small Piston (II) all the way by hand until it stops. **DO NOT** use a wrench.

D. Fasten the assembly from Step 56C to the Top Feedback Chamber (TT) using 6 Fiberglass Washers (RRR) and 6, 1/4-20 x 3 SHCS (TTT). Complete the entire assembly by bolting the Spring Chamber (FFF) into the Bottom Spacer (SSS) with 6 Fiberglass Washers (RRR) and 6, 1/4-20 x 2 SHCS (QQQ). Move to Step 57.

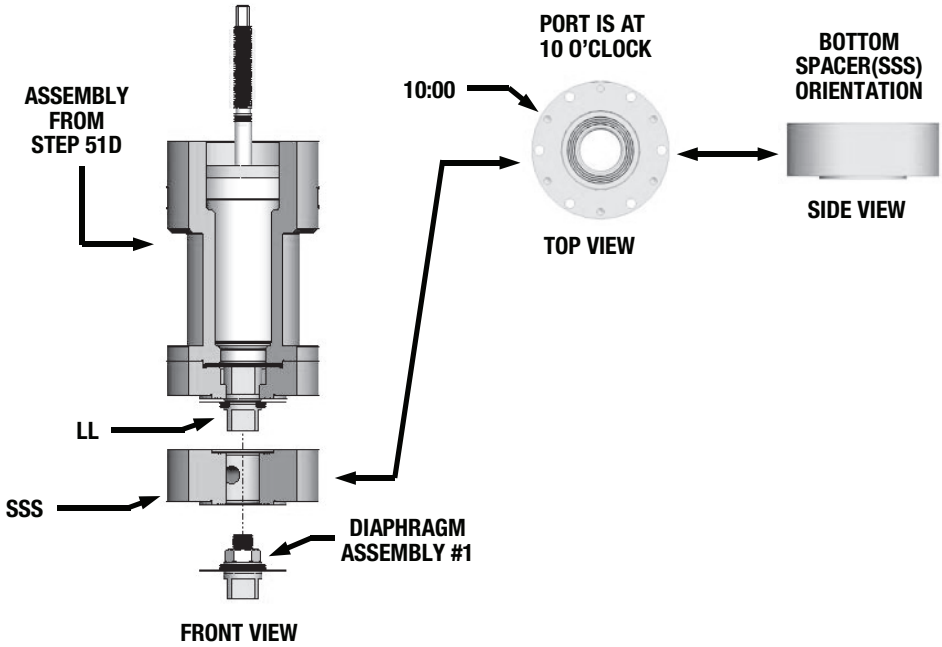

Figure 43

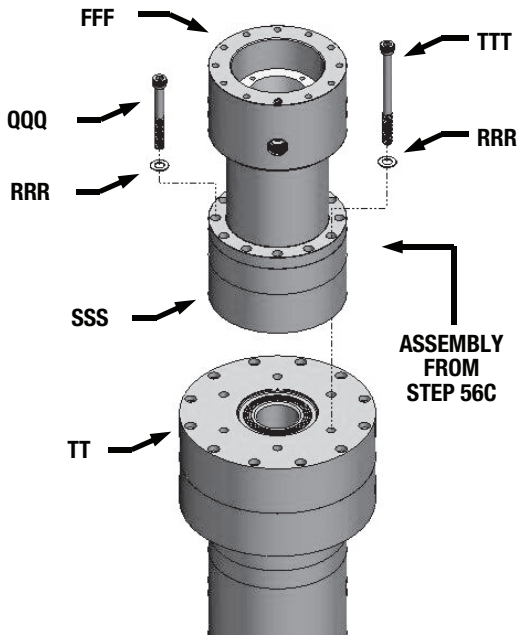

Figure 44

Cap Assembly

(Figures 45-51)

Step 57: Insert the Control Spring (NNN) assembly from Step 55 into the Spring Chamber (DDD or FFF). Fasten the Tube Cap (OOO) to the Inner Tube (CCC) with 4, 8-32 x 1/2" SHCS 316 SS (I). Use Tube Cap SS (000) and 8-32 x 1/2" SHCS Alloy (I) for the 1500 Model.

Step 58: For either the VRP-600-SB-PID (Figure 46) or VRP-1000/1500-SB-PID (Figure 47), slide a –141 O-Ring (WWW) over the Cartridge Cap (XXX or YYY), and a –115 O-Ring (UUU) over the Seal Neck (VVV). Thread the Seal Neck (VVV) into the Cartridge Cap (XXX or YYY).

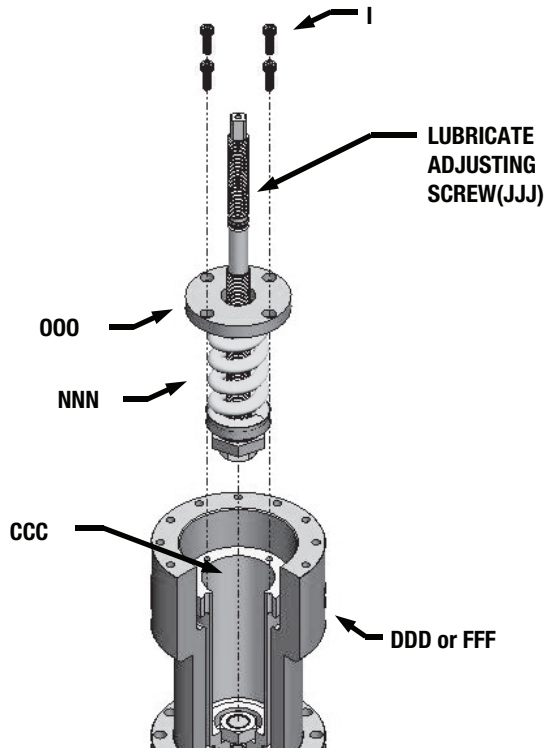

Figure 45

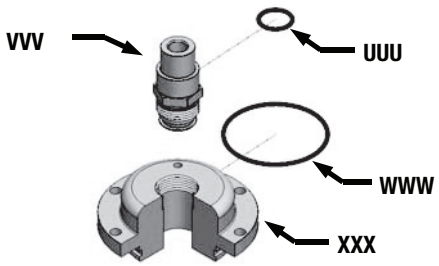

Figure 46

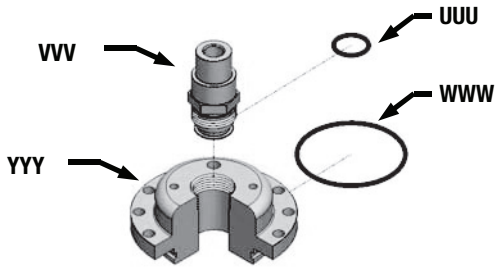

Figure 47

Step 59: For a VRP-600-SB-PID (Figure 48) or VRP-1000/1500-SB-PID (Figure 49), pull the Adjusting Screw (JJJ) up while threading the top cap assembly from Step 58 counter-clockwise. After cap assembly is firmly engaged continue turning the Adjusting Screw (JJJ) clockwise while pushing top cap assembly down. You will feel a firm engagement of the cap assembly in place. At this time orient the cap assembly such that the mounting holes are in line with the pressure ports. Bolt the Cap (XXX or YYY) using 6, 1/4-20 x 3/4" HHCS (Z) for a VRP-600-SB-PID or 12, 1/4-20 x 3/4" HHCS (Z) for a VRP-1000/1500-SB-PID.

Step 60: For either the VRP-600-SB-PID (Figure 50) or VRP-1000/1500-SB-PID (Figure 51), place the 7/16 SS Thread Seal (BBBB) and 7/16 SS Flat Washer (ZZZ) onto the Adjusting Screw (JJJ). After all the necessary adjustments on the PID are made, thread the 7/16 SS Jam Nut (AAAA) onto the Screw (JJJ), but be careful not to overtighten it. **OVERTIGHTENING THE JAM NUT (AAAA) MAY CAUSE DAMAGE TO THE ADJUSTING SCREW (JJJ)**.

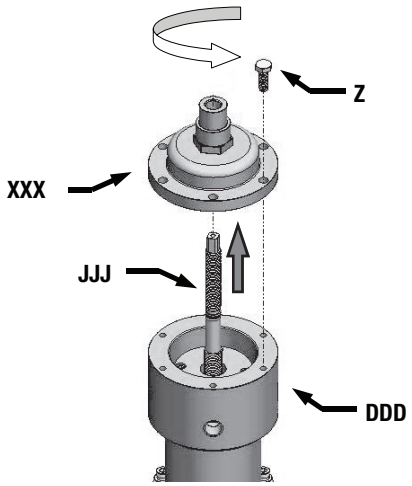

Figure 48

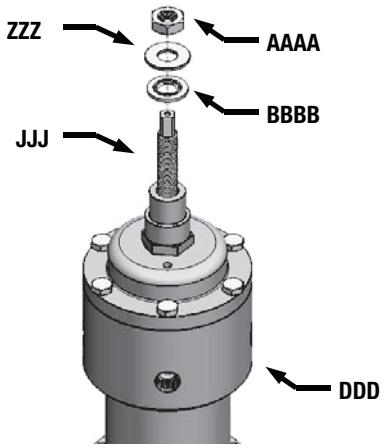

Figure 50

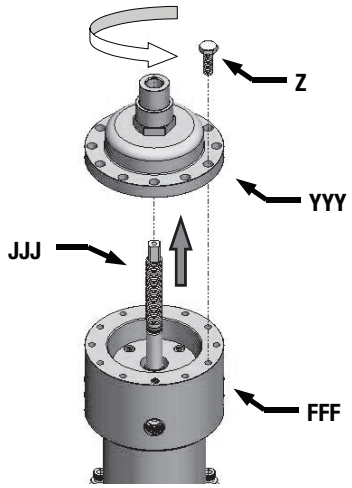

Figure 49

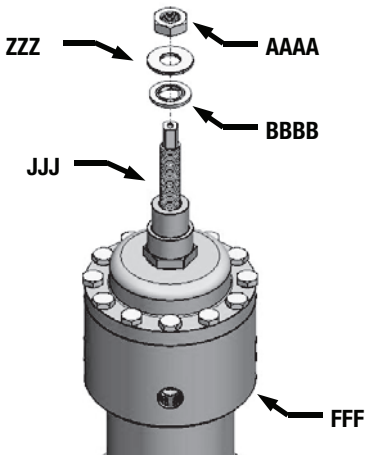

Figure 51

Appendix A - List of Recommended Tools

1. Allen wrenches – 9/64”, 3/16”, 1/8”
2. Open wrenches – 7/16”, 3/4”, 11/16”, 5/16”
3. Socket wrenches – 3/8” drive – 7/16”, 3/4” (Deepwell 13 Pt.)
4. 6” adjustable wrench
5. Screwdrivers Philips head, standard
6. Soft blow hammer
7. O-ring pik
8. Pen (centering of diaphragm)
9. General assembly grease
10. 3/8” drive torque wrench

Appendix B - Parts Silhouettes

Bolts and Washers

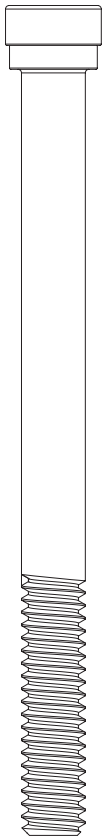

98-3231

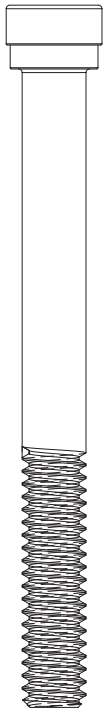

98-3232

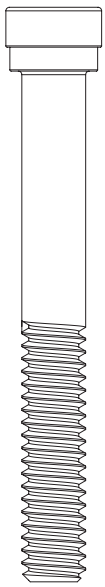

98-3230

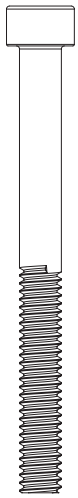

98-3238

98-2614
(316) SS

98-3269
(Alloy)

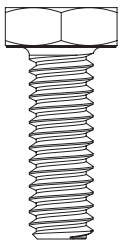

98-3237

98-2684

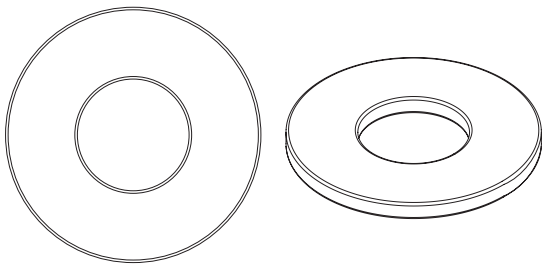

98-3181

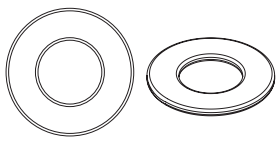

98-3227

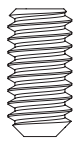

98-2761

Appendix B - Parts Silhouettes (Cont'd)

Washers and Nuts

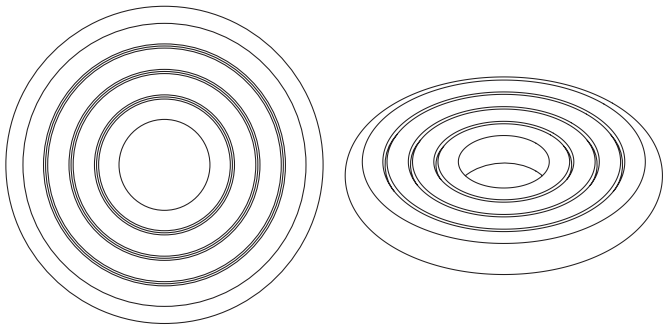

30-7053

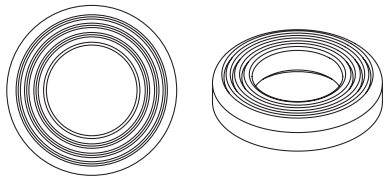

30-7014

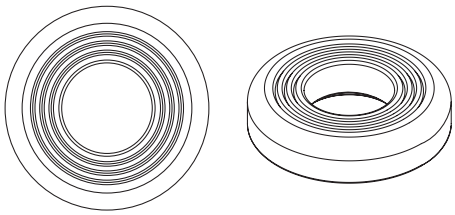

25-1016

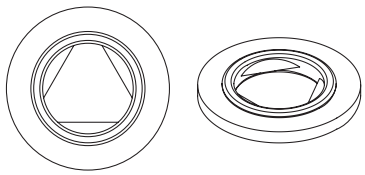

30-7017

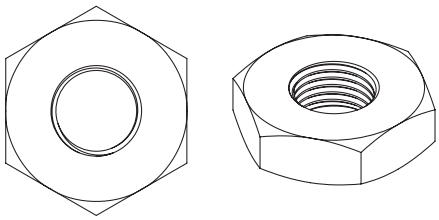

25-1065

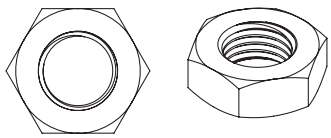

98-2500

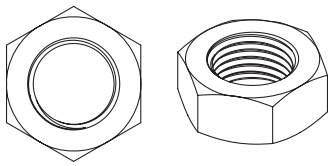

98-3056

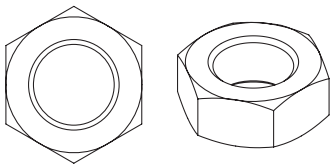

98-3213

Appendix B - Parts Silhouettes (Cont'd)

Diaghragm

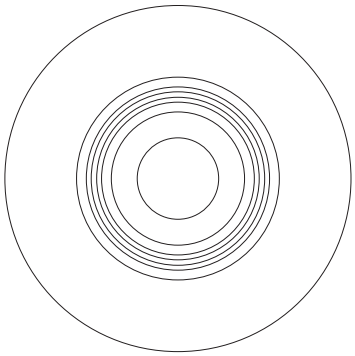

30-7011

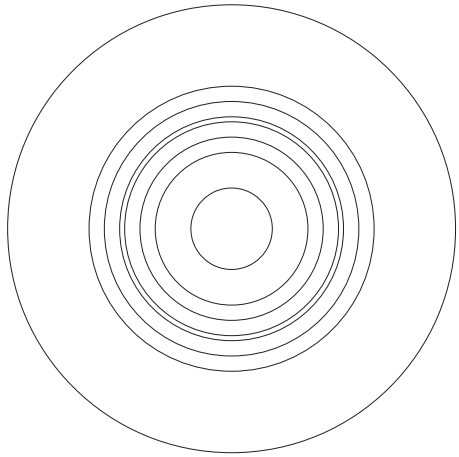

25-1027

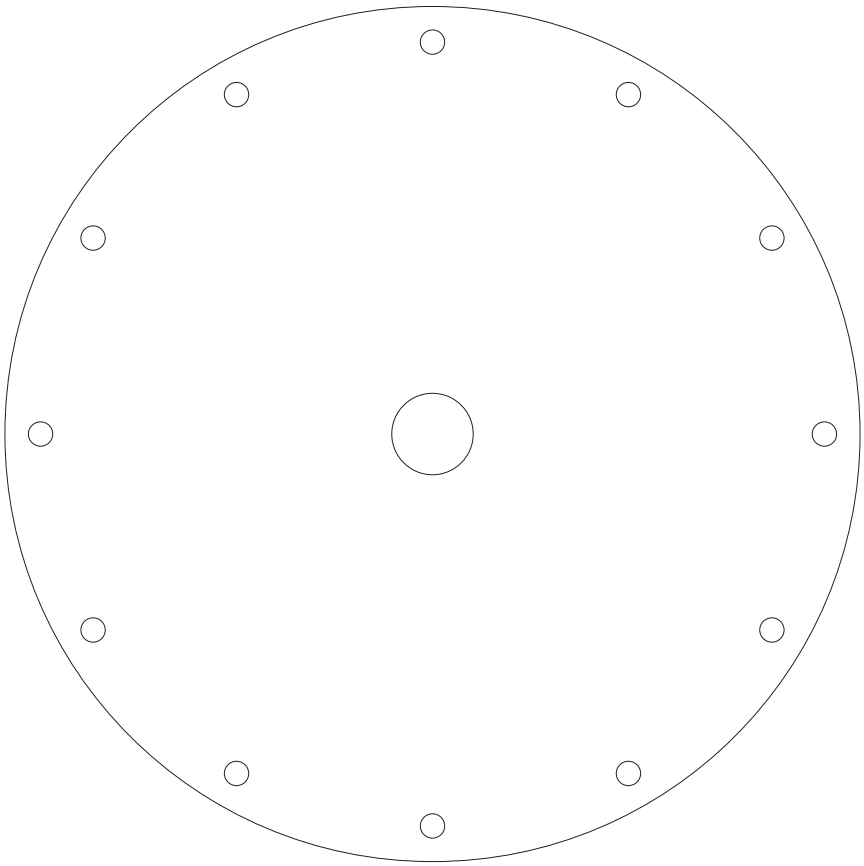

30-7032

Appendix B - Parts Silhouettes (Cont'd)

O-Rings

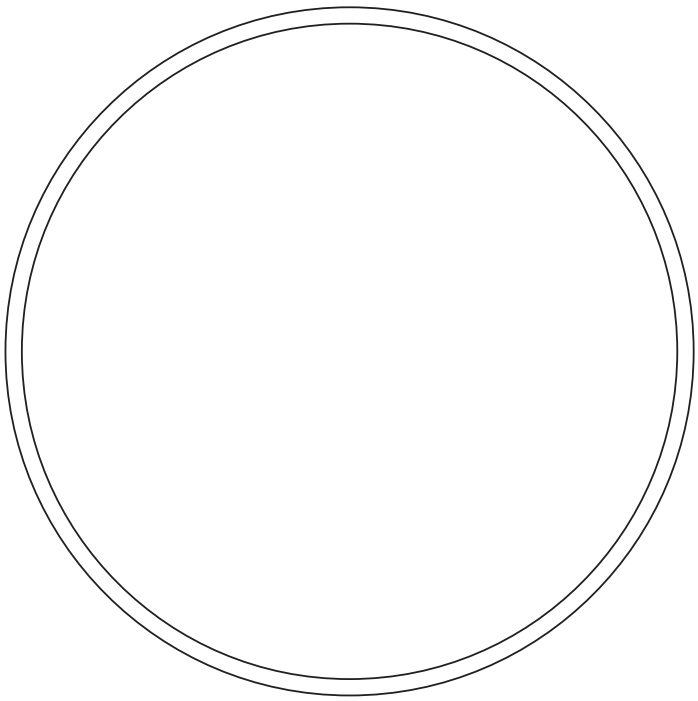

95-2674

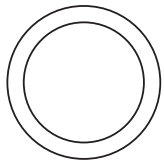

95-2670

95-2615

95-2609

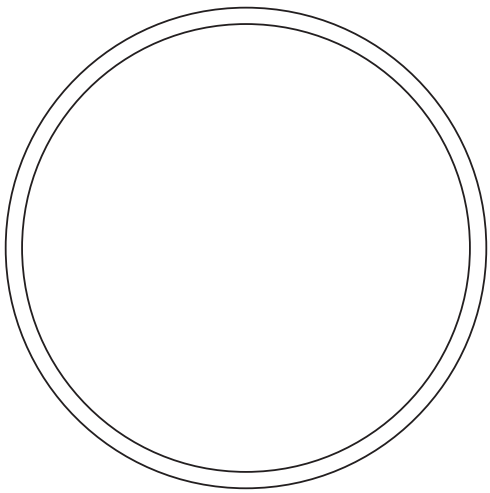

95-2665

95-2672

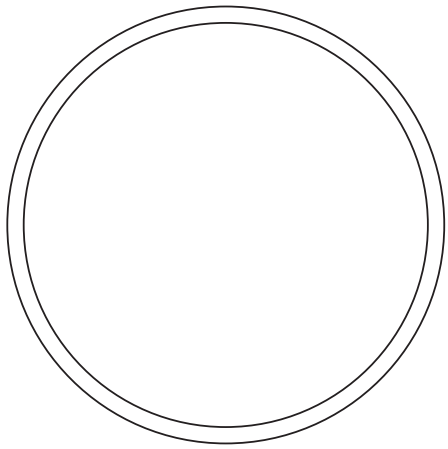

95-2671

DIRECT SALES OFFICE LOCATIONS

AUSTRALIA
Brisbane:
Phone: +61-7-3001-4319
Fax: +61-7-3001-4399

Perth:
Phone: +61-8-6595-7018
Fax: +61 8 6595-7299

Melbourne:
Phone: +61-3-8807-6002
Fax : +61-3-8807-6577

BELGIUM
Phone: +32-2-344-0970
Fax: +32-2-344-1123

BRAZIL
Phone: +55-19-2104-6900

CHINA
Phone: +86-10-5689-3600
Fax: +86-10-5689-3800

FRANCE
Courbevoie
Phone: +33-1-4904-9000
Fax: +33-1-4904-9010

GERMANY
Ratingen
Phone: +49-2102-108-0
Fax: +49-2102-108-111

INDIA
Mumbai
Phone: +91-22-8354790
Fax: +91-22-8354791

New Delhi
Phone: +91-11-2-6164175
Fax: +91-11-5-1659635

ITALY
Phone: +39-081-7892-111
Fax: +39-081-7892-208

JAPAN
Tokyo
Phone: +81-03-6871-9008
Fax: +81-03-6890-4620

KOREA
Phone: +82-2-2274-0748
Fax: +82-2-2274-0794

MALAYSIA
Phone: +60-3-2161-0322
Fax: +60-3-2163-6312

MEXICO
Phone: +52-55-3640-5060

THE NETHERLANDS
Phone: +31-15-3808666
Fax: +31-18-1641438

RUSSIA
Veliky Novgorod
Phone: +7-8162-55-7898
Fax: +7-8162-55-7921

Moscow
Phone: +7 495-585-1276
Fax: +7 495-585-1279

SAUDI ARABIA
Phone: +966-3-341-0278
Fax: +966-3-341-7624

SINGAPORE
Phone: +65-6861-6100
Fax: +65-6861-7172

SOUTH AFRICA
Phone: +27-11-452-1550
Fax: +27-11-452-6542

SOUTH AND CENTRAL
AMERICA AND THE CARIBBEAN
Phone: +55-12-2134-1201
Fax: +55-12-2134-1238

SPAIN
Phone: +34-93-652-6430
Fax: +34-93-652-6444

UNITED ARAB EMIRATES
Phone: +971-4-8991-777
Fax: +971-4-8991-778

UNITED KINGDOM
Bracknell
Phone: +44-1344-460-500
Fax: +44-1344-460-537

Skelmersdale
Phone: +44-1695-526-00
Fax: +44-1695-526-01

UNITED STATES
Massachusetts
Phone: +1-508-586-4600
Fax: +1-508-427-8971

Corpus Christi, Texas
Phone: +1-361-881-8182
Fax: +1-361-881-8246

Deer Park, Texas
Phone: +1-281-884-1000
Fax: +1-281-884-1010

Houston, Texas
Phone: +1-281-671-1640
Fax: +1-281-671-1735

GEA32438A 06/2016